## CONNOS TABLE OF CONTENTS

Specifications....2
Options....3
Tabouret Pricing....4
Vertical Tablet Arm Tabouret Pricing....5
Diagonal Tablet Arm Tabouret Pricing....6
Two Seat Bench Pricing....7
Three Seat Bench Pricing....8
Cluster Component Pricing....9
Star Grande Component Pricing....10
Arc Unit Pricing....11-12
Corner Pricing....13
Bench W/ Online Table Pricing....14-15
End Table Pricing....16-17
24" Round Table Pricing....18
30" Round Table Pricing....19
End Table Pricing....20
Tufting Design Options....21
Decorative Ganging....22
Flat Ganging....23
Multiple Fabric Placement Diagram....24
Model Overview....25
Overall Dimensions....26
Angle Unit Dimensions....27
Configurations/Sample Pricing....28-33
Cluster Configurations....34
Seating Arrangements....35
Online Tables....36

## CONNOS CLUSTER SEATING

Connos features comfortable seating with a geometric layout. Each bench configuration can be extended at any time.

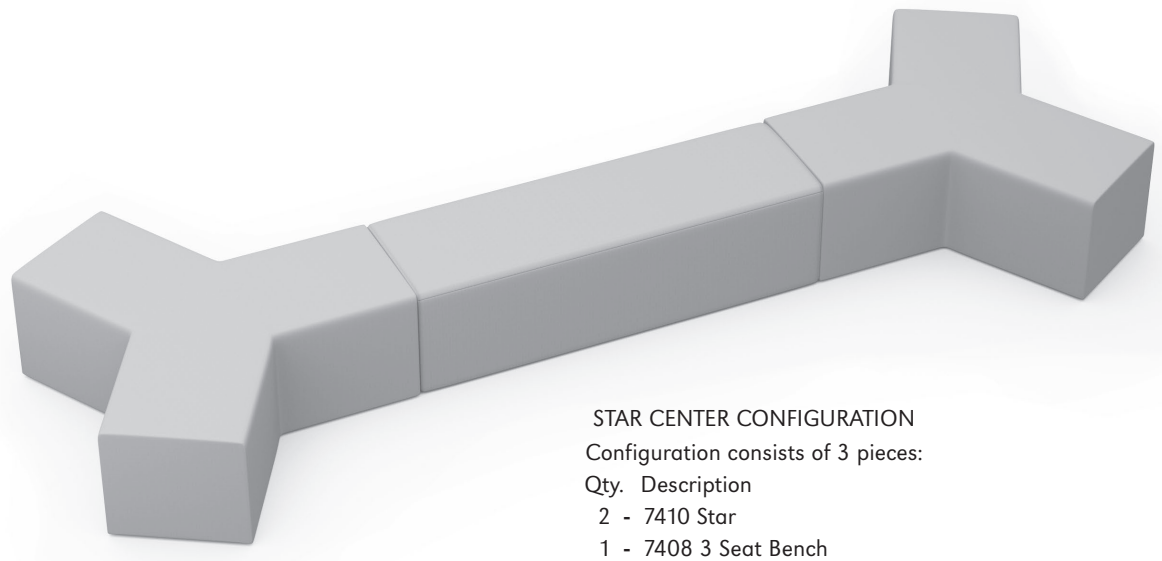

STAR CENTER CONFIGURATION
Configuration consists of 3 pieces:

| Qty. | Description |
|---|---|
| 2 | 7410 Star |
| 1 | 7408 3 Seat Bench |
| 2 | 7433 Flat Ganging |

## ORDERING INFORMATION

1) Series Name
2) Model Number
3) Quantity
4) Fabric Grade & Number
5) Optional Items
6) Tufting
7) Ganging
8) Specify Laminate or Stain Top

## CONNOS SPECIFICATIONS

**Upholstery**
Seat is covered in choice of fabric, vinyl, crypton, leather or COM. ERG uses only water based glues and adhesives in our upholstery process.

**Frame Construction**
Frame made out of hardwood with flexible webbing installed on seat for added support and soft sit. Frame is machine screwed to wood frame for durability.

**Power / Data**
Units are available with cove or flush units offering power data and usb charging. Please consult with your network administrator and ERG Customer Service.

Factory installed power/data available, See accessories online under the 'Products' tab.

**Glides**
Each unit comes with 4 adjustable 1.75" polyvinyl glides.

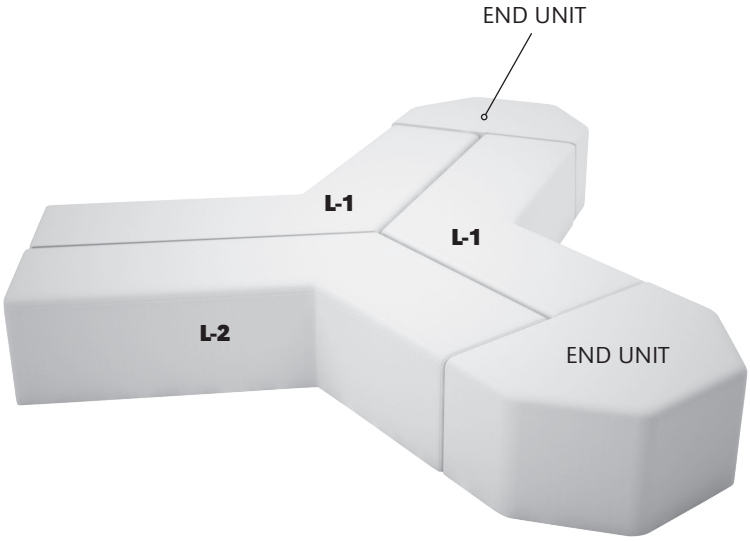


STAR
Configuration consists of 3 pieces + end units:

| Qty. | Description |
|---|---|
| 2 | **L-1** Angle Unit |
| 1 | **L-2** Angle Unit |
| 2 | 7411 Upholstered End Unit |
| 5 | 7433 Flat Ganging |

| SOFT SEATING | WEIGHT LIMIT |
|---|---|
| 1 Seat | 500 lbs. |
| 2 Seat | 1000 lbs. |
| 3 Seat | 1500 lbs. |

## TABLET SHAPES

**Choose from 2 Tablet Shapes:**

Tablets for Connos modular series are available in 2 shapes shown and specify A or B and left or right (outside tablet) when ordering.

Example: Model Number - (B) Left - this would be a fixed shape B tablet on the left side (when seated).

**Solid Surface**

Stock solid surface top is available in:

**Corian** Bone, Bronzite, Glacier White, and Silver Grey.

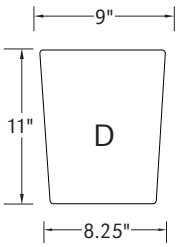


TRAPEZOID

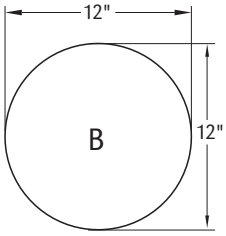


ROUND

Choice of Vertical or Diagonal fixed blade tablet arm.
Select Laminate or Solid Surface Tablet Top

2 tablet shape options available: Trapezoid and Round.

**Tablet height is 27" from the floor.**

Vertical Arm

Diagonal Arm

- Tablet orders of 5 or less - choice of 3 standard laminate colors: Wilsonart Black 1595-60, Formica Brite White 459-58 or Nevamar Silver Alu Metalx MXT003.
  Choice of 4 standard Corian colors: Bone, Bronzite, Glacier White, and Silver Grey.
- Tablet orders of 6 or more - any choice standard laminate colors.
- Optional Solid Surface available. Optional Solid Surface available.
- Vertical blade tablet arm available only for this model.

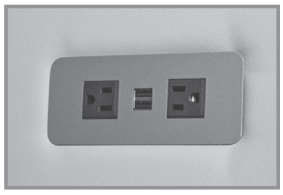

Cove Power/Data/USB

**Factory installed power/data available, See accessories online under the 'Products' tab**

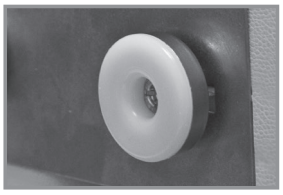

1.75" Dia. Glide

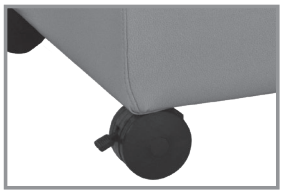

3" Locking Casters

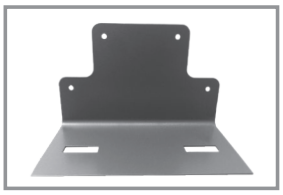

Decorative
Ganging Bracket

**NOTE: Decorative ganging devices used for straight configurations only**

Flat Ganging Bracket

**NOTE: Flat ganging devices used for curve and straight configurations**

## OPTIONS

- CODE: FR - CAL 133 (TB 133) Fire Retardant.
- CODE: MB-1 - Moisture Barrier Single Seat
- CODE: MB-2 - Moisture Barrier Two Seat
- CODE: MB-3 - Moisture Barrier Three Seat
- CODE: MB-4 - Moisture Barrier Four Seat
- CODE: TABF-(_) - Fixed Laminate Tablet - outside or between two modular units (specify tablet shape D or B)
- CODE: SST - Solid Surface Top
- CODE: TF1 - Tufting - single seat
- CODE: TF2 - Tufting - two seat
- CODE: TF3 - Tufting - three seat
- CODE: TFE - Tufting - end unit
- CODE: TFL-1 - Tufting - L-1 Corner
- CODE: TFL-2 - Tufting - L-2 Corner
- CODE: LAM5 - Non-standard laminate for 5 or less tablets see options for upcharge
- CODE: AGP - Adjustable Poly Glides (Laminate Cylinder Tables)
- CODE: SS5 - Non-standard Solid Surface top for 5 or less tablets

| DIMENSIONS | Sq. Tabouret | Mobile Sq. Tabouret |
|---|---|---|
| Overall Width: | 20" | 20" |
| Overall Depth: | 20" | 20" |
| Seat Height: | 18" | 18" |
| # of Seats: | 1 | 1 |
| Qty./Wt. per carton: | 1 ea./18 lbs. | 1 ea./26 lbs. |

SQUARE TABOURET

## MODEL / DESCRIPTION / LIST PRICING

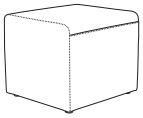

**7400** Square Tabouret (no casters)

COM Yardage: 2.25 Yds. / Top: .75 Yd. / Base: 1.5 Yd.

| COM | GR1 | GR2 | GR3 | GR4 | GR5 | GR6 | GR7 | GR8 | GR9 | GR10 | LEA |
|---|---|---|---|---|---|---|---|---|---|---|---|
| $957 | $1024 | $1065 | $1107 | $1152 | $1199 | $1246 | $1296 | $1347 | $1402 | $1457 | $1723 |

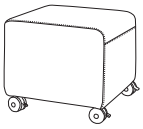

**7401** Mobile Square Tabouret (w/ casters)

COM Yardage: 2.25 Yds. / Top: .75 Yd. / Base: 1.5 Yd.

| COM | GR1 | GR2 | GR3 | GR4 | GR5 | GR6 | GR7 | GR8 | GR9 | GR10 | LEA |
|---|---|---|---|---|---|---|---|---|---|---|---|
| $1065 | $1140 | $1185 | $1232 | $1282 | $1333 | $1386 | $1441 | $1499 | $1559 | $1621 | $1916 |

MOBILE SQUARE TABOURET

## OPTIONS

Add upcharge to list price and code to model number

| | | |
|---|---|---|
| FR | CAL 133 (TB 133) Fire Retardant per yard | $90/yd. |
| MB-1 | Moisture Barrier single seat | $90 |

| | | |
|---|---|---|
| 2FO | Two Fabric Option | $98 |
| TF1 | Tufting - single seat | $189 |

| DIMENSIONS | Sq. Tabouret outside vert tablet arm | Mobile Sq. Tabouret outside vertical tablet arm |
|---|---|---|
| Overall Width: | 21" | 21" |
| Overall Depth: | 25" | 25" |
| Tablet Height: | - | 27" |
| Seat Height: | 18" | 18" |
| # of Seats: | 1 | 1 |
| Qty./Wt. per carton: | 1 ea./22 lbs. | 1 ea./22 lbs. |

MOBILE SQUARE TABOURET
W/ VERTICAL TABLET ARM

## MODEL / DESCRIPTION / LIST PRICING

**7402(B/D)** Square Tabouret outside vertical tablet arm (no casters) COM Yardage: 2.25 Yds. / Top: .75 Yd. / Base: 1.5 Yd.

| COM | GR1 | GR2 | GR3 | GR4 | GR5 | GR6 | GR7 | GR8 | GR9 | GR10 | LEA |
|---|---|---|---|---|---|---|---|---|---|---|---|
| $1413 | $1511 | $1572 | $1634 | $1700 | $1768 | $1839 | $1912 | $1989 | $2068 | $2152 | $2543 |

**7403(B/D)** Mobile Square Tabouret outside vertical tablet arm (w/ casters) COM Yardage: 2.25 Yds. / Top: .75 Yd. / Base: 1.5 Yd.

| COM | GR1 | GR2 | GR3 | GR4 | GR5 | GR6 | GR7 | GR8 | GR9 | GR10 | LEA |
|---|---|---|---|---|---|---|---|---|---|---|---|
| $1516 | $1622 | $1687 | $1756 | $1826 | $1898 | $1975 | $2054 | $2135 | $2220 | $2310 | $2729 |

## TABLET SHAPES

**Choose from 2 Tablet Shapes::**

Tablets for all modular series are available in 2 shapes, choose from the two shapes shown and specify; D or B and left or right (outside tablet) when ordering.

Optional Solid Surface available.

**Note:**

- Tablet orders of 5 or less - choice of 3 standard laminate colors: Wilsonart Black 1595-60, Formica Brite White 459-58 or Nevamar Silver Alu Metalx MXT003. Choice of 4 standard Corian colors: Bone, Bronzite, Glacier White, and Silver Grey.
- Tablet orders of 6 or more - any choice standard laminate colors.

Select from Laminate or Solid Surface Tablet Top
2 tablet shape options available:
Trapezoid and Round.

**Tablet height is 27" from the floor.**

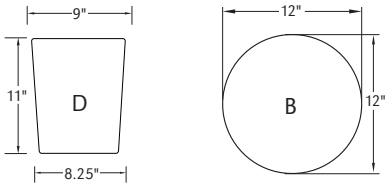


TRAPEZOID ROUND

Vertical Arm

## OPTIONS

Add upcharge to list price and code to model number

| | | |
|---|---|---|
| FR | CAL 133 (TB 133) Fire Retardant per yard | $90/yd. |
| MB-1 | Moisture Barrier on single seat | $90 |
| SST | Solid Surface Tablet Arm - add to tablet option | $125 |
| 2FO | Two Fabric Option | $98 |

| | | |
|---|---|---|
| TF1 | Tufting - single seat | $189 |
| LAM5 | Non-standard laminate (5 tablets or less) | $250 ea. tablet |
| SS5 | Non-standard Solid Surface (5 tablets or less) | Call For Quote |

| DIMENSIONS | Sq. Tabouret outside diagonal tablet arm | Mobile Sq. Tabouret outside diagonal tablet arm |
|---|---|---|
| Overall Width: | 21" | 21" |
| Overall Depth: | 25" | 25" |
| Tablet Height: | - | 27" |
| Seat Height: | 18" | 18" |
| # of Seats: | 1 | 1 |
| Qty./Wt. per carton: | 1 ea./18 lbs. | 1 ea./22 lbs. |

MOBILE SQUARE TABOURET
W/ DIAGONAL TABLET ARM

## MODEL / DESCRIPTION / LIST PRICING

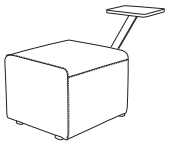

**7404(B/D)** Square Tabouret outside diagonal tablet arm (no casters) COM Yardage: 2.25 Yds. / Top: .75 Yd. / Base: 1.5 Yd.

| COM | GR1 | GR2 | GR3 | GR4 | GR5 | GR6 | GR7 | GR8 | GR9 | GR10 | LEA |
|---|---|---|---|---|---|---|---|---|---|---|---|
| $1506 | $1611 | $1675 | $1743 | $1813 | $1885 | $1960 | $2039 | $2120 | $2205 | $2293 | $2711 |

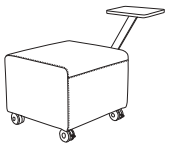

**7405 (B/D)** Mobile Square Tabouret outside diagonal tablet arm (w/ casters) COM Yardage: 2.25 Yds. / Top: .75 Yd. / Base: 1.5 Yd.

| COM | GR1 | GR2 | GR3 | GR4 | GR5 | GR6 | GR7 | GR8 | GR9 | GR10 | LEA |
|---|---|---|---|---|---|---|---|---|---|---|---|
| $1623 | $1736 | $1805 | $1878 | $1953 | $2032 | $2112 | $2197 | $2285 | $2376 | $2471 | $2921 |

## TABLET SHAPES

**Choose from 2 Tablet Shapes::**

Tablets for all modular series are available in 2 shapes, choose from the two shapes shown and specify; D or B and left or right (outside tablet) when ordering.

Optional Solid Surface available.

**Note:**

- Tablet orders of 5 or less - choice of 3 standard laminate colors: Wilsonart Black 1595-60, Formica Brite White 459-58 or Nevamar Silver Alu Metalx MXT003.
  Choice of 4 standard Corian colors: Bone, Bronzite, Glacier White, and Silver Grey.
- Tablet orders of 6 or more - any choice standard laminate colors.

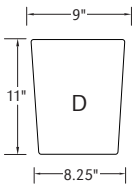


TRAPEZOID

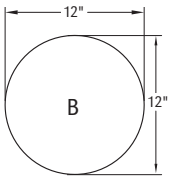


ROUND

Select from Laminate or Solid Surface Tablet Top
2 tablet shape options available:
Trapezoid and Round.

**Tablet height is 27" from the floor.**

Diagonal Arm

## OPTIONS

Add upcharge to list price and code to model number

| | | |
|---|---|---|
| FR | CAL 133 (TB 133) Fire Retardant per yard | $90/yd. |
| MB-1 | Moisture Barrier on single seat | $90 |
| SST | Solid Surface Tablet Arm - add to tablet option | $125 |
| 2FO | Two Fabric Option | $98 |

| | | |
|---|---|---|
| TF1 | Tufting - single seat | $189 |
| LAM5 | Non-standard laminate (5 tablets or less) | $250 ea. tablet |
| SS5 | Non-standard Solid Surface (5 tablets or less) | Call For Quote |

| DIMENSIONS | Two seat bench | Two seat bench outside vertical tablet arms |
|---|---|---|
| Overall Width: | 42" | 56" |
| Overall Depth: | 20" | 20" |
| Tablet Height: | - | 27" |
| Seat Height: | 18" | 18" |
| Qty./Wt. per carton: | 1 ea./42 lbs. | 1 ea./45 lbs. |

TWO SEAT BENCH

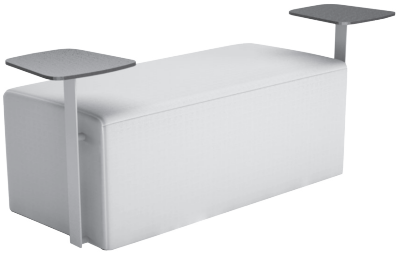

TWO SEAT BENCH / TWO OUTSIDE VERTICAL TABLET ARMS / TRAPEZOID SHAPE TABLETS

## MODEL / DESCRIPTION / LIST PRICING

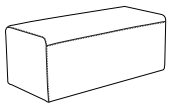

**7406** Two seat bench — COM Yardage: 4.25 Yds. / Top: 1.75 Yds. / Base: 2.5 Yds.

| COM | GR1 | GR2 | GR3 | GR4 | GR5 | GR6 | GR7 | GR8 | GR9 | GR10 | LEA |
|---|---|---|---|---|---|---|---|---|---|---|---|
| $1440 | $1540 | $1602 | $1666 | $1732 | $1802 | $1874 | $1949 | $2026 | $2108 | $2192 | $2591 |

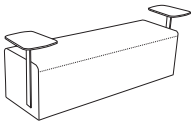

**7407 (B/D)** Two seat bench w/ two outside vertical tablet — COM Yardage: 5 Yds. / Top: 2 Yds. / Base: 3 Yds..

| COM | GR1 | GR2 | GR3 | GR4 | GR5 | GR6 | GR7 | GR8 | GR9 | GR10 | LEA |
|---|---|---|---|---|---|---|---|---|---|---|---|
| $2128 | $2277 | $2369 | $2462 | $2562 | $2664 | $2771 | $2882 | $2996 | $3116 | $3241 | $3830 |

## TABLET SHAPES

**Choose from 2 Tablet Shapes:**

Tablets for Connos modular series are available in 2 shapes trapezoid or round.
Specify D (trapezoid) or B (round)

- Tablet orders of 5 or less - choice of 3 standard laminate colors: Wilsonart Black 1595-60, Formica Brite White 459-58 or Nevamar Silver Alu Metalx MXT003.
  Choice of 4 standard Corian colors: Bone, Bronzite, Glacier White, and Silver Grey.
- Tablet orders of 6 or more - any choice standard laminate colors.
- Optional Solid Surface available. Optional Solid Surface available.
- Vertical blade tablet arm available only for this model.

**Tablet height is 27" from the floor.**

Vertical Arm

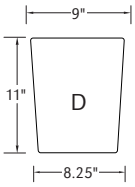


TRAPEZOID

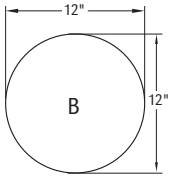


ROUND

## OPTIONS

Add upcharge to list price and code to model number

| | | |
|---|---|---|
| FR | CAL 133 (TB 133) Fire Retardant per yard | $90/yd. |
| MB-2 | Moisture Barrier two seat | $180 |
| SST | Solid Surface Tablet Arm - add to tablet option | $125 |
| 2FO | Two Fabric Option | $98 |

| | | |
|---|---|---|
| TF2 | Tufting - two seat | $340 |
| LAM5 | Non-standard laminate (5 tablets or less) | $250 ea. tablet |
| SS5 | Non-standard Solid Surface (5 tablets or less) | Call For Quote |

| DIMENSIONS | Three seat bench | Three seat bench outside vertical tablet arms |
|---|---|---|
| Overall Width: | 64" | 78" |
| Overall Depth: | 20" | 20" |
| Tablet Height: | - | 27" |
| Seat Height: | 18" | 18" |
| Qty./Wt. per carton: | 1 ea./42 lbs. | 1 ea./45 lbs. |

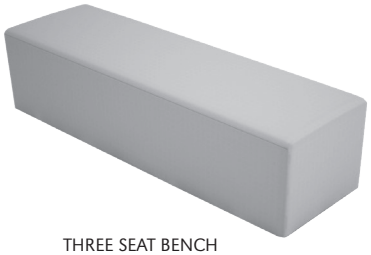

THREE SEAT BENCH

THREE SEAT BENCH / 2 OUTSIDE TABLET ARMS / ROUND TABLET TOPS

## MODEL / DESCRIPTION / LIST PRICING

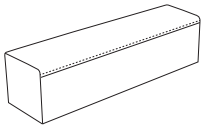

**7408** Three Seat Bench

COM Yardage: 5.75 Yds. / Top: 2.5 Yds. / Base: 3.25 Yds..

| COM | GR1 | GR2 | GR3 | GR4 | GR5 | GR6 | GR7 | GR8 | GR9 | GR10 | LEA |
|---|---|---|---|---|---|---|---|---|---|---|---|
| $1710 | $1830 | $1903 | $1979 | $2058 | $2142 | $2227 | $2316 | $2408 | $2505 | $2605 | $3078 |

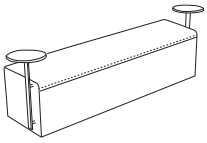

**7409 (B/D)** Three Seat Bench W/ 2 Outside Vertical Tablet Arms

COM Yardage : 6.25 Yds. / Top: 2.75 Yds. / Base: 3.5 Yds..

| COM | GR1 | GR2 | GR3 | GR4 | GR5 | GR6 | GR7 | GR8 | GR9 | GR10 | LEA |
|---|---|---|---|---|---|---|---|---|---|---|---|
| $2523 | $2701 | $2809 | $2921 | $3038 | $3160 | $3285 | $3416 | $3553 | $3695 | $3843 | $4543 |

## ARM DETAIL

**Arm Detail**

Tablet Arms for Connos are available in diagonal and vertical. Tablet arms for the Connos series are spaced to accentuate the sleek thin blade arm.

- Tablet orders of 5 or less - choice of 3 standard laminate colors: Wilsonart Black 1595-60, Formica Brite White 459-58 or Nevamar Silver Alu Metalx MXT003.
  Choice of 4 standard Corian colors: Bone, Bronzite, Glacier White, and Silver Grey.
- Tablet orders of 6 or more - any choice standard laminate colors
- Optional Solid Surface available. Optional Solid Surface available.
- Vertical blade tablet arm available only for this model.

**Tablet height is 27" from the floor.**

## OPTIONS

Add upcharge to list price and code to model number

| | | |
|---|---|---|
| FR | CAL 133 (TB 133) Fire Retardant per yard | $90/yd. |
| MB-3 | Moisture Barrier three seat | $270 |
| SST | Solid Surface Tablet Arm - add to tablet option | $125 |
| 2FO | Two Fabric Option | $98 |

| | | |
|---|---|---|
| TF3 | Tufting - three seat | $486 |
| LAM5 | Non-standard laminate (5 tablets or less) | $250 ea. tablet |
| SS5 | Non-standard Solid Surface (5 tablets or less) | Call For Quote |

| DIMENSIONS | Star | Upholstered End Unit |
|---|---|---|
| Overall Width: | 48" | 41" |
| Overall Depth: | 55" | 20" |
| Seat Height: | 18" | 18" |
| # of Seats: | 3 | 2 |
| Qty./Wt. per carton: | 1 ea./40 lbs. | 1 ea./40 lbs. |

STAR

UPHOLSTERED END UNIT

## MODEL / DESCRIPTION / LIST PRICING

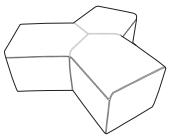

**7410** Star (One piece construction)

COM Yardage: 5.5 Yds. / Top: 2.5 Yd. / Base: 3 Yds.

| COM | GR1 | GR2 | GR3 | GR4 | GR5 | GR6 | GR7 | GR8 | GR9 | GR10 | LEA |
|---|---|---|---|---|---|---|---|---|---|---|---|
| $3990 | $4270 | $4441 | $4617 | $4803 | $4994 | $5194 | $5402 | $5618 | $5842 | $6077 | $7182 |

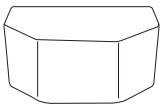

**7411** Upholstered End Unit

COM Yardage: 3.25 Yds. / Top: 1.25 Yd. / Base: 2 Yds.

| COM | GR1 | GR2 | GR3 | GR4 | GR5 | GR6 | GR7 | GR8 | GR9 | GR10 | LEA |
|---|---|---|---|---|---|---|---|---|---|---|---|
| $1748 | $1872 | $1946 | $2023 | $2105 | $2189 | $2277 | $2369 | $2462 | $2560 | $2663 | $3148 |

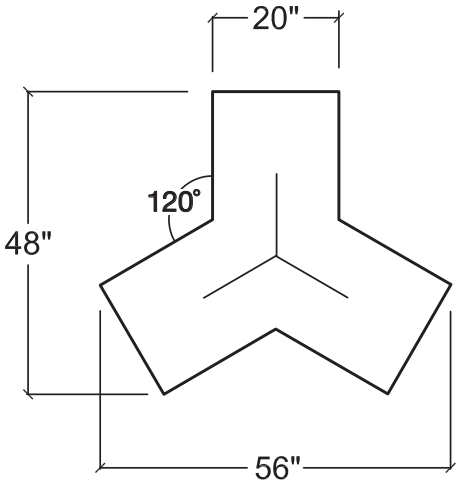


STAR

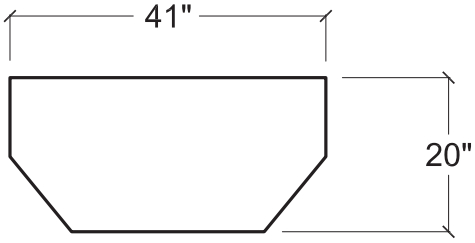


UPHOLSTERED END UNIT

## OPTIONS

Add upcharge to list price and code to model number

| | | |
|---|---|---|
| FR | CAL 133 (TB 133) Fire Retardant per yard | $90/yd. |
| MB-2 | Moisture Barrier two seat (End Unit) | $180 |
| MB-3 | Moisture Barrier three seat (Star) | $270 |

| | | |
|---|---|---|
| 2FO | Two Fabric Option | $98 |
| TFE | Tufting - End Unit | $340 |

| DIMENSIONS | **L-1** Angle Unit | **L-2** Angle Unit |
|---|---|---|
| Overall Width: | 70" | 97" |
| Overall Depth: | 20" | 20" |
| Seat Height: | 18" | 18" |
| # of Seats: | 4 | 4 |
| Qty./Wt. per carton: | 1 ea./50 lbs. | 1 ea./55 lbs. |

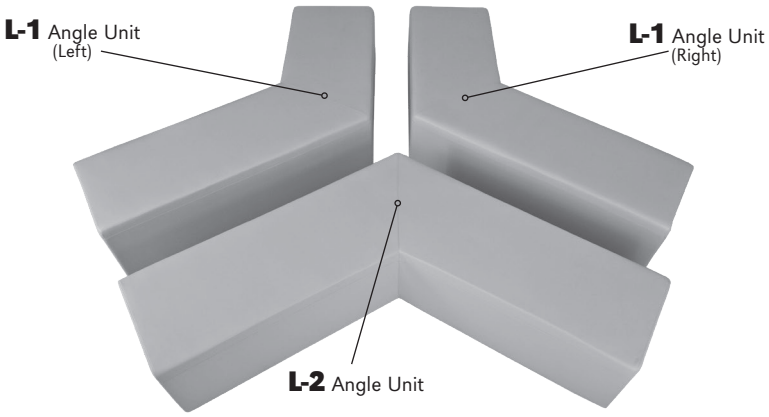


**STAR GRANDE**

## MODEL / DESCRIPTION / LIST PRICING

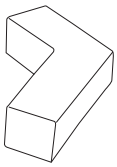

**7412L** **L-1** Angle Unit (Left) — COM Yardage: 6.5 Yds. / Top: 2.5 Yds. / Base: 4 Yds.

| COM | GR1 | GR2 | GR3 | GR4 | GR5 | GR6 | GR7 | GR8 | GR9 | GR10 | LEA |
|---|---|---|---|---|---|---|---|---|---|---|---|
| $3188 | $3411 | $3548 | $3690 | $3837 | $3990 | $4151 | $4316 | $4490 | $4668 | $4855 | $5739 |

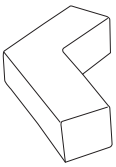

**7412R** **L-1** Angle Unit (Right) — COM Yardage: 6.5 Yds. / Top: 2.5 Yds. / Base: 4 Yds.

| COM | GR1 | GR2 | GR3 | GR4 | GR5 | GR6 | GR7 | GR8 | GR9 | GR10 | LEA |
|---|---|---|---|---|---|---|---|---|---|---|---|
| $3188 | $3411 | $3548 | $3690 | $3837 | $3990 | $4151 | $4316 | $4490 | $4668 | $4855 | $5739 |

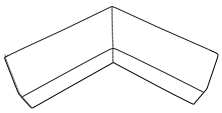

**7413** **L-2** Angle Unit — COM Yardage: 6.5 Yds. / Top: 2.5 Yds. / Base: 4 Yds.

| COM | GR1 | GR2 | GR3 | GR4 | GR5 | GR6 | GR7 | GR8 | GR9 | GR10 | LEA |
|---|---|---|---|---|---|---|---|---|---|---|---|
| $3804 | $4070 | $4234 | $4403 | $4579 | $4762 | $4953 | $5151 | $5356 | $5571 | $5793 | $6848 |

Star Grande consists of 3 pieces:
2 - **L-1** Angle Unit
1 - **L-2** Angle Unit

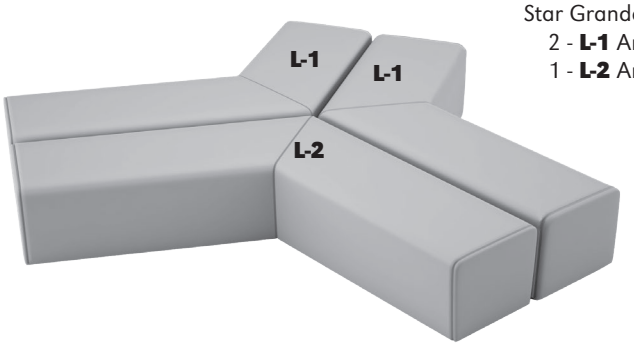


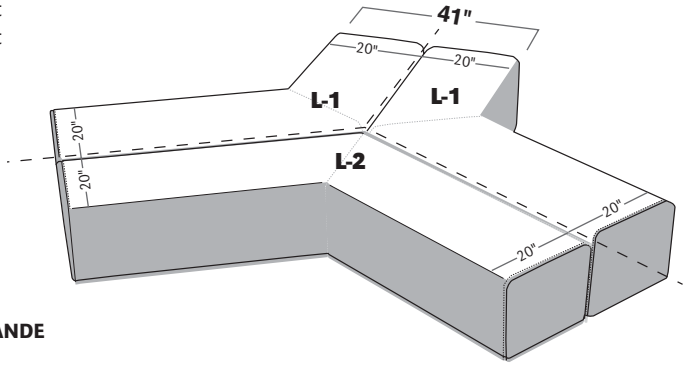


**STAR GRANDE**

NOTE: For overall angle unit dimensions please refer to page 11.

## OPTIONS

Add upcharge to list price and code to model number

| | | |
|---|---|---|
| FR | CAL 133 (TB 133) Fire Retardant per yard | $90/yd. |
| MB-4 | Moisture Barrier four seat | $360 |
| 2FO | Two Fabric Option | $98 |

| | | |
|---|---|---|
| TFL-1 | Tufting - L-1 Angle Unit | $590 |
| TFL-2 | Tufting - L-2 Angle Unit | $650 |

| DIMENSIONS | 30˚ Arc | 45˚ Arc |
|---|---|---|
| Overall Width: | 26.5" | 33" |
| Overall Depth: | 20" | 20" |
| Seat Height: | 18" | 18" |
| # of Seats: | 1 | 1 |
| Qty./Wt. per carton: | 1 ea./35 lbs. | 1 ea./40 lbs. |

30˚ ARC

## MODEL / DESCRIPTION / LIST PRICING

**7414** 30˚ Arc

COM Yardage: 3 Yds. / Top: 1 Yd. / Base: 2 Yds.

| COM | GR1 | GR2 | GR3 | GR4 | GR5 | GR6 | GR7 | GR8 | GR9 | GR10 | LEA |
|---|---|---|---|---|---|---|---|---|---|---|---|
| $1024 | $1095 | $1140 | $1185 | $1232 | $1282 | $1333 | $1386 | $1442 | $1499 | $1559 | $1843 |

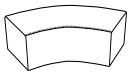

**7415** 45˚ Arc

COM Yardage: 4.5 Yds. / Top: 2 Yds. / Base: 2.5 Yds.

| COM | GR1 | GR2 | GR3 | GR4 | GR5 | GR6 | GR7 | GR8 | GR9 | GR10 | LEA |
|---|---|---|---|---|---|---|---|---|---|---|---|
| $1386 | $1485 | $1543 | $1606 | $1669 | $1735 | $1805 | $1878 | $1952 | $2032 | $2112 | $2496 |



45˚ ARC

NOTE: • Tufting not available on curved and corner units.
• Decorative ganging not applicable to curved units.

## OPTIONS

Add upcharge to list price and code to model number

| | | |
|---|---|---|
| FR | CAL 133 (TB 133) Fire Retardant per yard | $90/yd. |
| MB-1 | Moisture Barrier single seat | $90 |

| | | |
|---|---|---|
| 2FO | Two Fabric Option | $98 |

| DIMENSIONS | 60˚ Arc | 90˚ Arc |
|---|---|---|
| Overall Width: | 43" | 64" |
| Overall Depth: | 20" | 20" |
| Seat Height: | 18" | 18" |
| # of Seats: | 2 | 3 |
| Qty./Wt. per carton: | 1 ea./45 lbs. | 1 ea./50 lbs. |

60˚ ARC

## MODEL / DESCRIPTION / LIST PRICING

**7416** 60˚ Arc

COM Yardage: 4.75 Yds. / Top: 2 Yds. / Base: 2.75 Yds.

| COM | GR1 | GR2 | GR3 | GR4 | GR5 | GR6 | GR7 | GR8 | GR9 | GR10 | LEA |
|---|---|---|---|---|---|---|---|---|---|---|---|
| $1604 | $1717 | $1784 | $1856 | $1930 | $2008 | $2088 | $2171 | $2258 | $2349 | $2443 | $2887 |

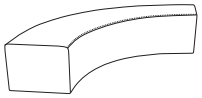

**7417** 90° Arc

COM Yardage: 7 Yds. / Seat: 3.5 Yds. / Base: 3.5 Yds.

| COM | GR1 | GR2 | GR3 | GR4 | GR5 | GR6 | GR7 | GR8 | GR9 | GR10 | LEA |
|---|---|---|---|---|---|---|---|---|---|---|---|
| $1874 | $2005 | $2085 | $2168 | $2255 | $2346 | $2439 | $2538 | $2638 | $2744 | $2854 | $3372 |

90˚ ARC

NOTE: • Tufting not available on curved and corner units.
• Decorative ganging not applicable to curved units.

## OPTIONS

Add upcharge to list price and code to model number

| | | |
|---|---|---|
| FR | CAL 133 (TB 133) Fire Retardant per yard | $90/yd. |
| MB-2 | Moisture Barrier two seat | $180 |

| | | |
|---|---|---|
| MB-3 | Moisture Barrier three seat | $270 |
| 2FO | Two Fabric Option | $98 |

| DIMENSIONS | 90˚ Round Corner | 90˚ Square Corner |
|---|---|---|
| Overall Width: | 42" | 32" |
| Overall Depth: | 42" | 32" |
| Seat Height: | 18" | 18" |
| # of Seats: | 1 | 1 |
| Qty./Wt. per carton: | 1 ea./47 lbs. | 1 ea./47 lbs. |

90˚ ROUND CORNER

## MODEL / DESCRIPTION / LIST PRICING

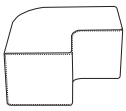

**7418** 90˚Round Corner

COM Yardage: 4.5 Yds. / Seat: 1.5 Yds. / Base: 3 Yds.

| COM | GR1 | GR2 | GR3 | GR4 | GR5 | GR6 | GR7 | GR8 | GR9 | GR10 | LEA |
|---|---|---|---|---|---|---|---|---|---|---|---|
| $1775 | $1899 | $1975 | $2054 | $2135 | $2221 | $2311 | $2402 | $2498 | $2599 | $2703 | $3194 |

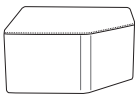

**7419** 90˚ Square Corner

COM Yardage: 3.25 Yds. / Seat: 1.5 Yd. / Base: 1.75 Yds.

| COM | GR1 | GR2 | GR3 | GR4 | GR5 | GR6 | GR7 | GR8 | GR9 | GR10 | LEA |
|---|---|---|---|---|---|---|---|---|---|---|---|
| $1705 | $1824 | $1897 | $1972 | $2051 | $2133 | $2219 | $2309 | $2400 | $2496 | $2596 | $3067 |

90˚ SQUARE CORNER

NOTE: Tufting not available on curved and corner units.

## OPTIONS

Add upcharge to list price and code to model number

| | | |
|---|---|---|
| FR | CAL 133 (TB 133) Fire Retardant per yard | $90/yd. |
| MB-1 | Moisture Barrier single seat | $90 |

| | | |
|---|---|---|
| 2FO | Two Fabric Option | $98 |
| TFC | Tufting 90˚ Square Corner Piece | $486 |

| DIMENSIONS | 1 seat bench w/ online end table (Laminate Top) |
|---|---|
| Overall Width: | 42" |
| Overall Depth: | 20" |
| Seat Height: | 18" |
| Table Height: | 16" |
| Qty./Wt. per carton: | 1 ea./25 lbs. |

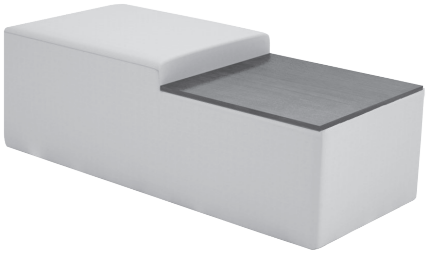

1 SEAT BENCH W/ LAMINATE TOP ONLINE TABLE

## MODEL / DESCRIPTION / LIST PRICING

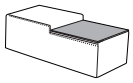

**7420-L** 1 Seat Bench w/ Laminate Top Online Table

COM Yardage: 4.25 Yds. / Top: 1.75 Yds. / Base: 2.5 Yds.

| COM | GR1 | GR2 | GR3 | GR4 | GR5 | GR6 | GR7 | GR8 | GR9 | GR10 | LEA |
|---|---|---|---|---|---|---|---|---|---|---|---|
| $1777 | $1901 | $1977 | $2057 | $2137 | $2224 | $2313 | $2406 | $2502 | $2602 | $2706 | $3199 |

**7420-W** 1 Seat Bench w/ Wood Veneer Top Online Table

COM Yardage: 4.25 Yds. / Top: 1.75 Yds. / Base: 2.5 Yds.

| COM | GR1 | GR2 | GR3 | GR4 | GR5 | GR6 | GR7 | GR8 | GR9 | GR10 | LEA |
|---|---|---|---|---|---|---|---|---|---|---|---|
| $1865 | $1995 | $2074 | $2158 | $2243 | $2334 | $2427 | $2523 | $2625 | $2730 | $2839 | $3355 |

NOTE: Edge: GR 2B or 3A available with 3 mm PVC, or 4B Exposed Core

## OPTIONS

Add upcharge to list price and code to model number

| | | |
|---|---|---|
| FR | CAL 133 (TB 133) Fire Retardant per yard | $90/yd. |
| MB-1 | Moisture Barrier single seat | $90 |
| TABF-(_) | Fixed Tablet (specify blade or outside(L/R), shape D, B) | $370 |

| | | |
|---|---|---|
| 2FO | Two Fabric Option | $98 |
| TF1 | Tufting - one seat | $189 |
| SST | Solid Surface | CALL |
| LAM5 | Non-standard laminate (5 tablets or less) | $250 ea. tablet |

| DIMENSIONS | 2 seat bench w/ online end table (Laminate Top) | 2 seat bench w/ online middle table (Laminate Top) |
|---|---|---|
| Overall Width: | 64" | 64" |
| Overall Depth: | 20" | 20" |
| Seat Height: | 18" | 18" |
| Table Height: | 16" | 16" |
| Qty./Wt. per carton: | 1 ea./30 lbs. | 1 ea./35 lbs. |

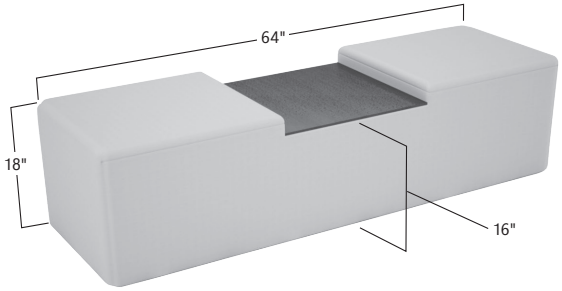


2 SEAT BENCH W/ LAMINATED TOP ONLINE CENTER TABLE

## MODEL / DESCRIPTION / LIST PRICING

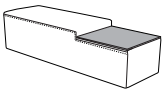

**7421-L** 2 Seat Bench w/ Laminate Top Online Table (Left or Right end) COM Yardage: 5.25 Yds. / Seat: 2 Yds. / Base: 3.25 Yds.

| COM | GR1 | GR2 | GR3 | GR4 | GR5 | GR6 | GR7 | GR8 | GR9 | GR10 | LEA |
|---|---|---|---|---|---|---|---|---|---|---|---|
| $2091 | $2236 | $2326 | $2419 | $2515 | $2616 | $2721 | $2830 | $2942 | $3060 | $3182 | $3762 |

**7421-W** 2 Seat Bench w/ Wood Veneer Top Online Table (Left or Right end) COM Yardage: 5.25 Yds. / Seat: 2 Yds. / Base: 3.25 Yds.

| COM | GR1 | GR2 | GR3 | GR4 | GR5 | GR6 | GR7 | GR8 | GR9 | GR10 | LEA |
|---|---|---|---|---|---|---|---|---|---|---|---|
| $2194 | $2348 | $2443 | $2541 | $2642 | $2747 | $2857 | $2971 | $3090 | $3214 | $3342 | $3950 |

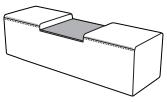

**7422-L** 2 Seat Bench w/ Laminate Top Online Table COM Yardage: 6 Yds. / Seat: 2 Yds. / Base: 3.25 Yds.

| COM | GR1 | GR2 | GR3 | GR4 | GR5 | GR6 | GR7 | GR8 | GR9 | GR10 | LEA |
|---|---|---|---|---|---|---|---|---|---|---|---|
| $2091 | $2236 | $2326 | $2419 | $2515 | $2616 | $2721 | $2830 | $2942 | $3060 | $3182 | $3762 |

**7422-W** 2 Seat Bench w/ Wood Veneer Top Online Table COM Yardage: 5.25 Yds. / Seat: 2 Yds. / Base: 3.25 Yds.

| COM | GR1 | GR2 | GR3 | GR4 | GR5 | GR6 | GR7 | GR8 | GR9 | GR10 | LEA |
|---|---|---|---|---|---|---|---|---|---|---|---|
| $2194 | $2348 | $2443 | $2541 | $2642 | $2747 | $2857 | $2971 | $3090 | $3214 | $3342 | $3950 |

2 SEAT BENCH W/ LAMINATE TOP ONLINE TABLE

NOTE: Edge: GR 2B or 3A available with 3 mm PVC, or 4B Exposed Core

## OPTIONS

Add upcharge to list price and code to model number

| | | |
|---|---|---|
| FR | CAL 133 (TB 133) Fire Retardant per yard | $90/yd. |
| MB-2 | Moisture Barrier two seat | $180 |
| TABF-(_) | Fixed Tablet (specify blade or outside(L/R), shape D, B) | $370 |
| 2FO | Two Fabric Option | $98 |

| | | |
|---|---|---|
| TF2 | Tufting - two seat | $340 |
| SST | Solid Surface | CALL |
| LAM5 | Non-standard laminate (5 tablets or less) | $250 ea. tablet |

| DIMENSIONS | Online Solid Table | Upholstered Online Table w/ Laminate Top |
|---|---|---|
| Overall Width: | 20" | 20" |
| Overall Depth: | 20" | 20" |
| Overall Height: | 16" | 16" |
| Qty./Wt. per carton: | 1 ea./35 lbs. | 1 ea./40 lbs. |

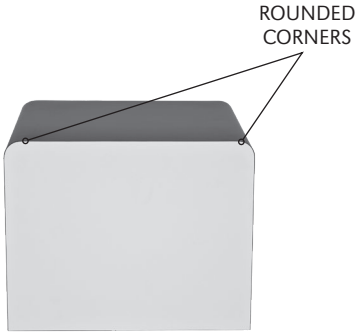


ONLINE SOLID TABLE
W/ 2 LAMINATE OPTION PROFILE

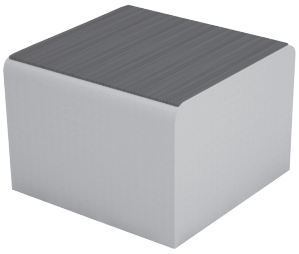

UPHOLSTERED ONLINE TABLE
W/ LAMINATE TOP

## MODEL / DESCRIPTION / LIST PRICING

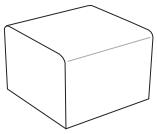

**7423** Online Solid Laminated Table (Cube Type)

| LAMINATE |
|---|
| $1313 |

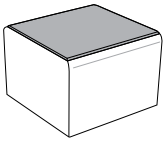

**7424-L** Upholstered Online Table w/ Laminate Top — COM Yardage: 1.5 Yds. / Base: 1.5 Yds.

| COM | GR1 | GR2 | GR3 | GR4 | GR5 | GR6 | GR7 | GR8 | GR9 | GR10 | LEA |
|---|---|---|---|---|---|---|---|---|---|---|---|
| $1454 | $1557 | $1619 | $1683 | $1752 | $1821 | $1893 | $1969 | $2048 | $2130 | $2215 | $2618 |

**7424-W** Upholstered Online Table w/ Wood Veneer Top — COM Yardage: 1.5 Yds. / Base: 1.5 Yds.

| COM | GR1 | GR2 | GR3 | GR4 | GR5 | GR6 | GR7 | GR8 | GR9 | GR10 | LEA |
|---|---|---|---|---|---|---|---|---|---|---|---|
| $1527 | $1635 | $1700 | $1769 | $1839 | $1912 | $1989 | $2069 | $2152 | $2238 | $2327 | $2750 |

NOTE: Edge: GR 2B or 3A available with 3 mm PVC, or 4B Exposed Core

NOTE: Flat ganging brackets attaching units to tables may be used.

## OPTIONS

Add upcharge to list price and code to model number

| | | |
|---|---|---|
| FR | CAL 133 (TB 133) Fire Retardant per yard | $90/yd. |
| 2LC | Two Laminate Option | $125 |

| | | |
|---|---|---|
| SST | Solid Surface | CALL |

| DIMENSIONS | Online Open End Table |
|---|---|
| Overall Width: | 20" |
| Overall Depth: | 20" |
| Overall Height: | 16" |
| Qty./Wt. per carton: | 1 ea./30 lbs. |

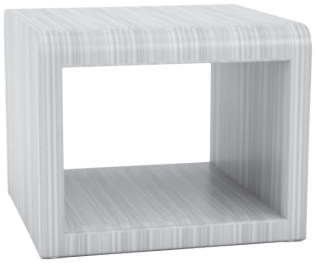

ONLINE OPEN END TABLE

## MODEL / DESCRIPTION / LIST PRICING

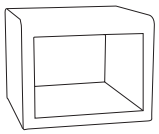

**7425** Online Open End Table

LAMINATE
$1820

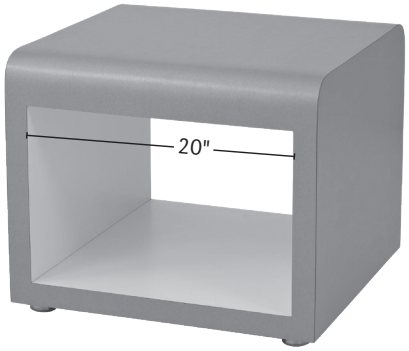


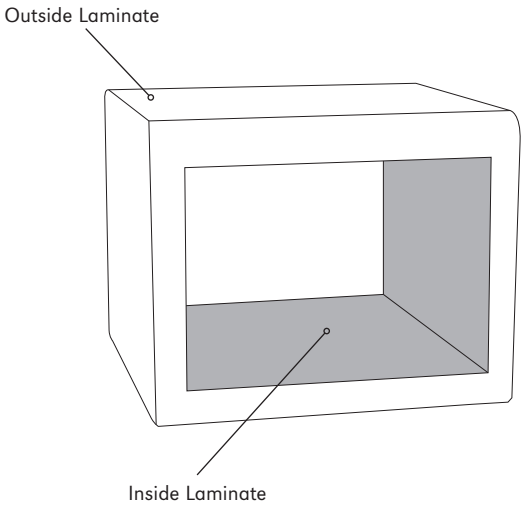


ONLINE OPEN END TABLE
W/ 2 LAMINATE PLACEMENT OPTION

NOTE: Flat ganging brackets may be used to attach units to tables.

## OPTIONS

Add upcharge to list price and code to model number

| | | |
|---|---|---|
| 2LC | Two Laminate Option | $125 |

| DIMENSIONS | 24" dia. round table |
|---|---|
| Overall Width: | 24" |
| Overall Depth: | 24" |
| Overall Height: | 16" |
| Qty./Wt. per carton: | 1 ea./30 lbs. |

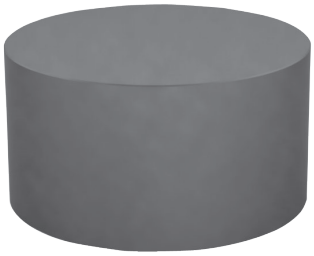

24" DIA ROUND TABLE

## MODEL / DESCRIPTION / LIST PRICING

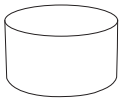

**7426** 24" Round Laminate Table

| LAMINATE |
|---|
| $1136 |

NOTE: Laminate cylinder tables have factory installed tap-in glides.

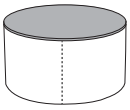

**7427-L** 24" Round Upholstered Table w/ Laminate Top

COM Yardage: 1.5 Yds. / Base: 1.5 Yds.

| COM | GR1 | GR2 | GR3 | GR4 | GR5 | GR6 | GR7 | GR8 | GR9 | GR10 | LEA |
|---|---|---|---|---|---|---|---|---|---|---|---|
| $1583 | $1693 | $1761 | $1832 | $1905 | $1982 | $2061 | $2144 | $2229 | $2318 | $2410 | $2849 |

**7427-W** 24" Round Upholstered Table w/ Wood Veneer Top

COM Yardage: 1.5 Yds. / Base: 1.5 Yds.

| COM | GR1 | GR2 | GR3 | GR4 | GR5 | GR6 | GR7 | GR8 | GR9 | GR10 | LEA |
|---|---|---|---|---|---|---|---|---|---|---|---|
| $1662 | $1779 | $1850 | $1924 | $2001 | $2081 | $2164 | $2250 | $2340 | $2435 | $2532 | $2992 |

NOTE: Edge: GR 2B or 3A available with 3 mm PVC, or 4B Exposed Core

## OPTIONS

Add upcharge to list price and code to model number

| | | |
|---|---|---|
| FR | CAL 133 (TB 133) Fire Retardant per yard | $90/yd. |
| 2LC | Two Laminate Option | $125 |

| | | |
|---|---|---|
| SST | Solid Surface | CALL |
| AGP | Adjustable Poly Glides (Laminate Cylinder Table) | $60 |

| DIMENSIONS | 30" dia. round table |
|---|---|
| Overall Width: | 30" |
| Overall Depth: | 30" |
| Overall Height: | 16" |
| Qty./Wt. per carton: | 1 ea./35 lbs. |

30" DIA ROUND
UPHOLSTERED TABLE
WITH LAMINATE TOP

## MODEL / DESCRIPTION / LIST PRICING

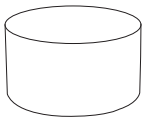

**7428** 30" Round Laminate Table

LAMINATE
$1317

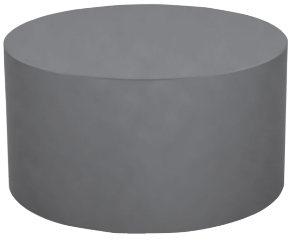

30" DIA ROUND TABLE

NOTE: Laminate cylinder tables have factory installed tap-in glides.

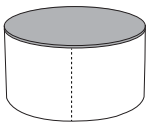

**7429-L** 30" Round Upholstered Table w/ Laminate Top — COM Yardage: 1.75 Yds. / Base: 1.75 Yds.

| COM | GR1 | GR2 | GR3 | GR4 | GR5 | GR6 | GR7 | GR8 | GR9 | GR10 | LEA |
|---|---|---|---|---|---|---|---|---|---|---|---|
| $1636 | $1752 | $1821 | $1894 | $1970 | $2049 | $2130 | $2216 | $2304 | $2397 | $2493 | $2946 |

**7429-W** 30" Round Upholstered Table w/ Wood Veneer Top — COM Yardage: 1.75 Yds. / Base: 1.75 Yds.

| COM | GR1 | GR2 | GR3 | GR4 | GR5 | GR6 | GR7 | GR8 | GR9 | GR10 | LEA |
|---|---|---|---|---|---|---|---|---|---|---|---|
| $1700 | $1819 | $1891 | $1966 | $2046 | $2128 | $2213 | $2301 | $2394 | $2490 | $2589 | $3060 |

NOTE: Edge: GR 2B or 3A available with 3 mm PVC, or 4B Exposed Core

## OPTIONS

Add upcharge to list price and code to model number

| | | |
|---|---|---|
| FR | CAL 133 (TB 133) Fire Retardant per yard | $90/yd. |
| 2LC | Two Laminate Option | $125 |

| | | |
|---|---|---|
| SST | Solid Surface | CALL |
| AGP | Adjustable Poly Glides (Laminate Cylinder Table) | $60 |

| DIMENSIONS | Laminate End Unit | Upholstered End Unit w/ Laminate Top |
|---|---|---|
| Overall Width: | 41" | 41" |
| Overall Depth: | 20" | 20" |
| Overall Height: | 16" | 16" |
| Qty./Wt. per carton: | 1 ea./35 lbs. | 1 ea./40 lbs. |

UPHOLSTERED BOTTOM END UNIT
W/ LAMINATE TOP

## MODEL / DESCRIPTION / LIST PRICING

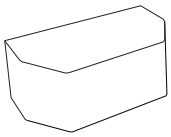

**7430** Laminate End Unit

| LAMINATE |
|---|
| $1754 |

LAMINATE END UNIT

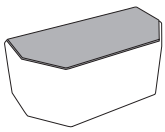

**7431-L** Upholstered End Unit w/ Laminate Top

COM Yardage: 2 Yds.

| COM | GR1 | GR2 | GR3 | GR4 | GR5 | GR6 | GR7 | GR8 | GR9 | GR10 | LEA |
|---|---|---|---|---|---|---|---|---|---|---|---|
| $1860 | $1990 | $2069 | $2153 | $2238 | $2328 | $2421 | $2518 | $2618 | $2723 | $2832 | $3347 |

**7431-W** Upholstered End Unit w/ Wood Veneer Top

COM Yardage: 2 Yds.

| COM | GR1 | GR2 | GR3 | GR4 | GR5 | GR6 | GR7 | GR8 | GR9 | GR10 | LEA |
|---|---|---|---|---|---|---|---|---|---|---|---|
| $1953 | $2091 | $2173 | $2261 | $2350 | $2445 | $2543 | $2644 | $2749 | $2859 | $2975 | $3515 |

NOTE: Edge: GR 2B or 3A available with 3 mm PVC, or 4B Exposed Core

## OPTIONS

Add upcharge to list price and code to model number

| | | |
|---|---|---|
| FR | CAL 133 (TB 133) Fire Retardant per yard | $90/yd. |
| 2LC | Two Laminate Option | $125 |

| | | |
|---|---|---|
| SST | Solid Surface | CALL |

## TUFTING

**Choose from 2 Tufting Designs:**

Tufting for all lounge, ottoman and bench series are available in 2 designs.
Please specify Square or Diamond tufting when ordering.

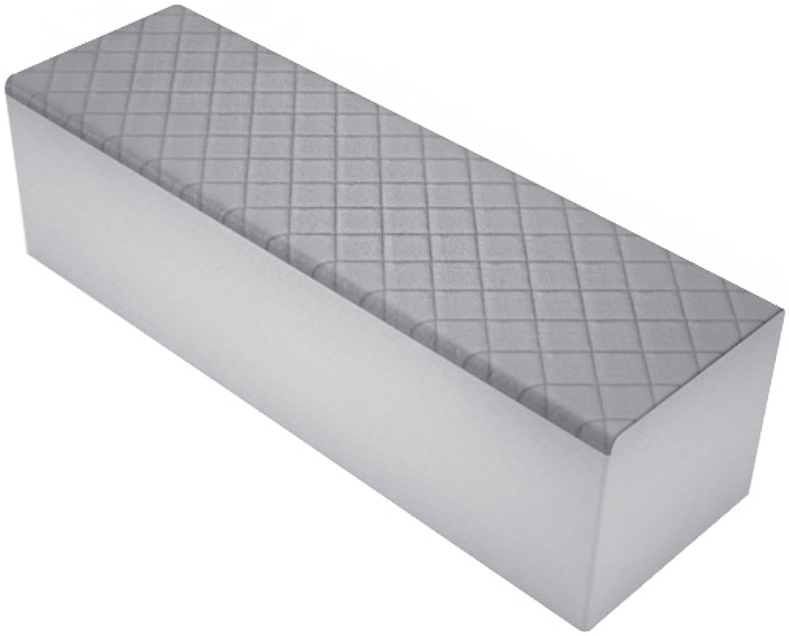

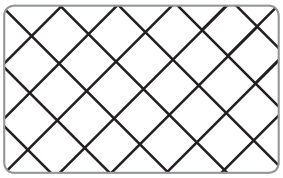

diamond

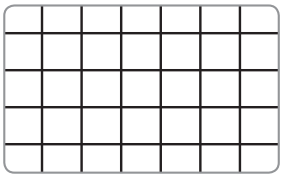

square

Tufting available only for the following models:

**Tabourets:** 7401, 7402, 7403, 7404, 7405

**Two Seat Benches:** 7406, 7407

**Three Seat Benches:** 7408, 7409

**End Unit** 7411

**L-1 Corner** 7412

**L-2 Corner** 7413

**90˚ Square Corner** 7419

**Straight Unit w/ Online Tables:** 7420, 7421, 7422

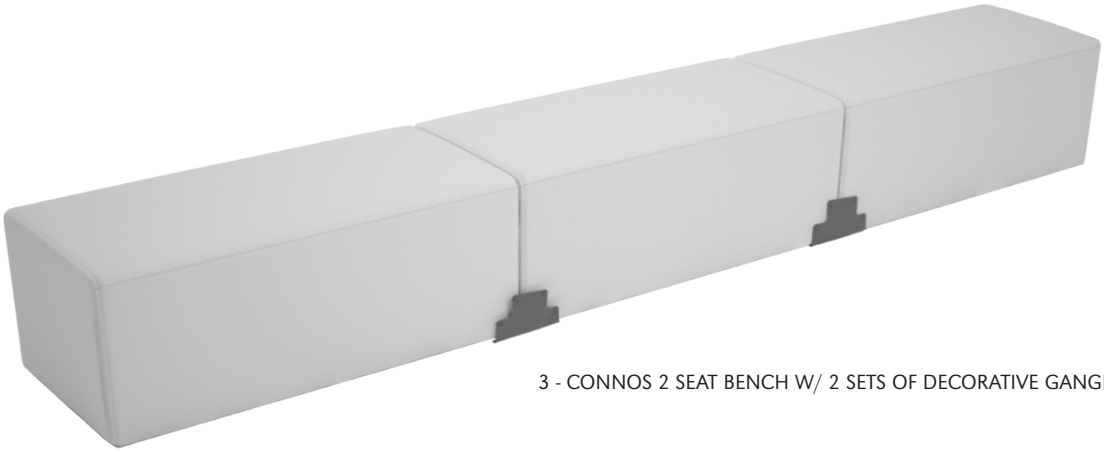

3 - CONNOS 2 SEAT BENCH W/ 2 SETS OF DECORATIVE GANGING BRACKETS

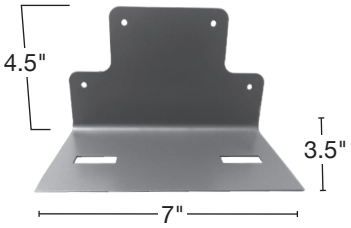


DECORATIVE

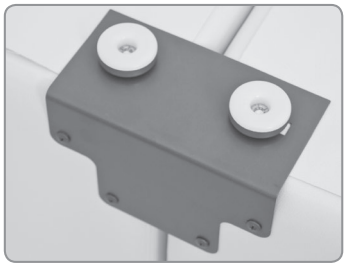

DECORATIVE GANGING
INSTALLED WITH 1.75" GLIDES

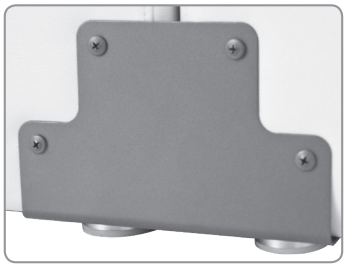

DECORATIVE GANGING DETAIL

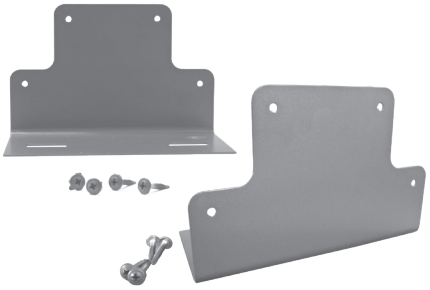

1 Ganging Kit includes 2 brackets and 2 sets of screws
(to be installed in the field)

**Decorative ganging brackets available only for the following models:**

**Two Seat Benches:** 7406, 7407

**Three Seat Benches:** 7408, 7409

**Star** 7410

**End Units:** 7411, 7431

**L-1 Corner** 7412

**L-2 Corner** 7413

**90˚ Round Corner** 7418

**90˚ Square Corner** 7419

**Benches w/ Online Tables:** 7420, 7421, 7422

NOTES:
- Decorative ganging or flat ganging brackets can be used for straight configurations.
- Curved configurations use flat ganging brackets only.
- One ganging bracket installed on each side of the unit.

**Ganging Bracket Finishing**

Add a little color accent to any Decorative Ganging Bracket with 4 standard powder coat finishes or Polished Chrome. Other colors available at extra cost.

- **Brushed Aluminum**
- **Black Gloss**
- **Oiled Bronze**
- **White**
- **Polished Chrome**

## MODEL / DESCRIPTION / LIST PRICING

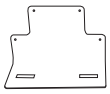

**7432** 90˚ Decorative Ganging Bracket
$98/pair

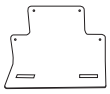

**7432-P** 90˚ Decorative Ganging Bracket - Polished Chrome
$177/pair

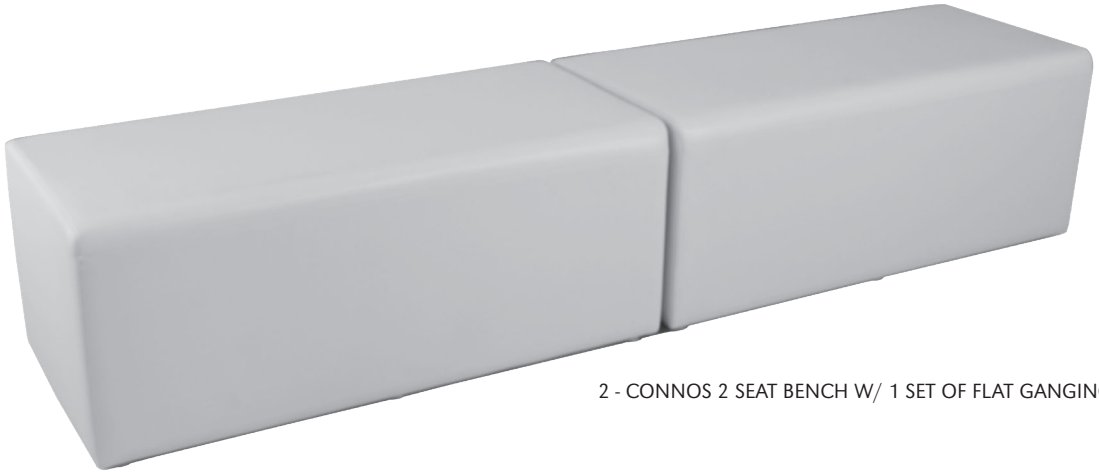

2 - CONNOS 2 SEAT BENCH W/ 1 SET OF FLAT GANGING BRACKETS

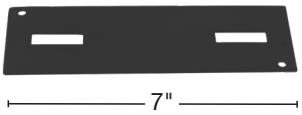


FLAT

FLAT GANGING WITH 1.75" GLIDES

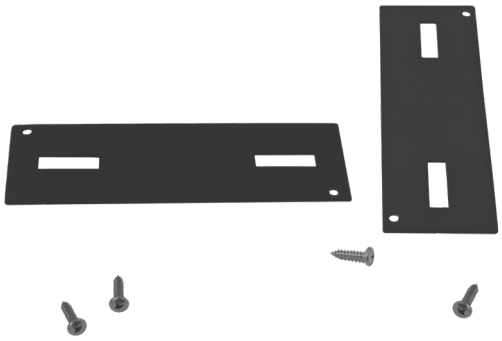

1 Ganging Kit includes 2 flat brackets and 2 sets of screws
(to be installed in the field)

NOTE: Flat ganging brackets are used on curved configurations.

FLAT GANGING DETAIL WITH GLIDES

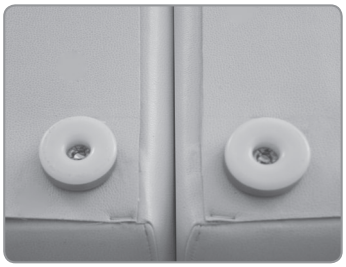

WITHOUT GANGING

**Flat ganging is available for all models in standard black powder coat color.**

## MODEL / DESCRIPTION / LIST PRICING

| | | |
|---|---|---|
| 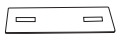 | **7433** | Flat Ganging Bracket<br>$58/pair |

**Choose from the following fabric options:**

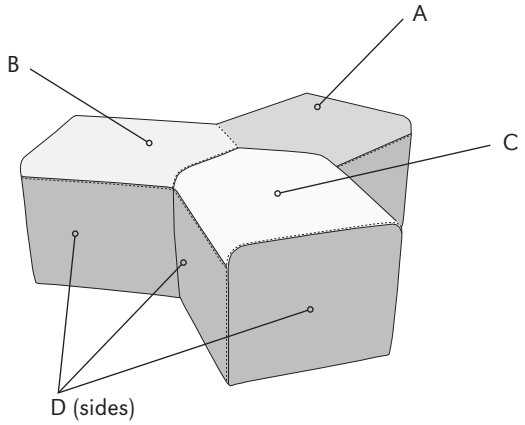


4 Fabric option - Star (one piece)

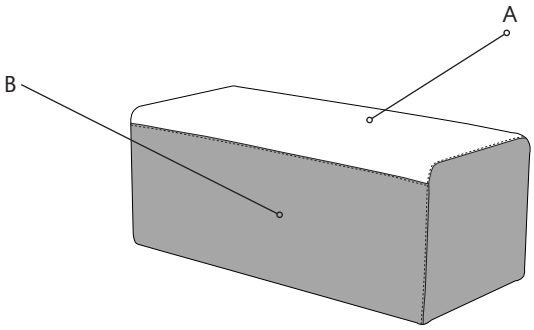


2 Fabric option - Bench

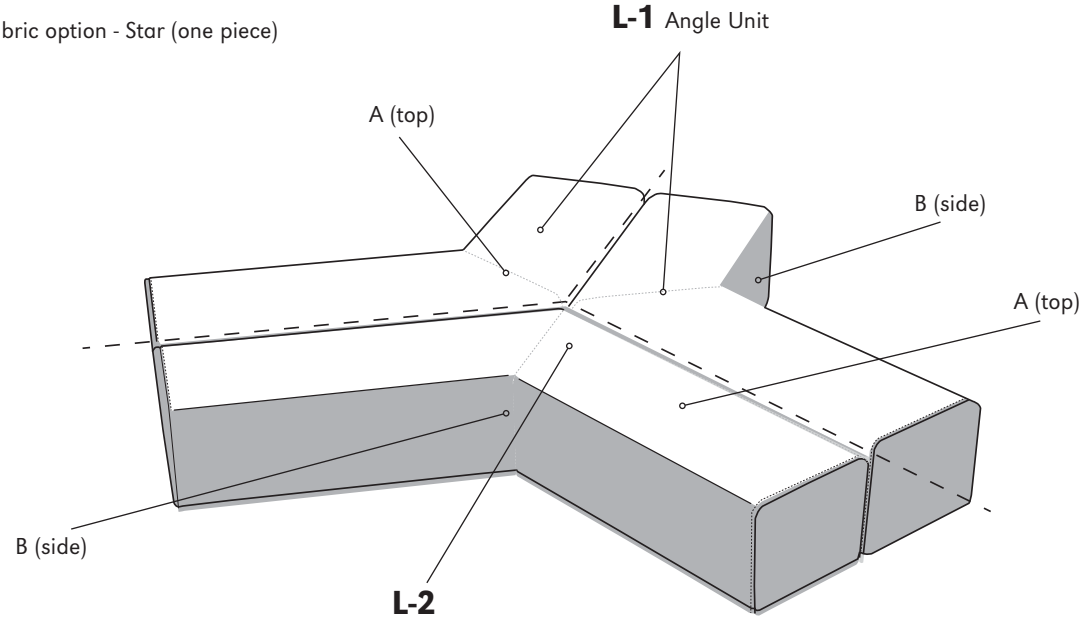


2 Fabric option - Star Grande - **L-1** Angle Unit and **L-2** Angle Unit (3-pieces)

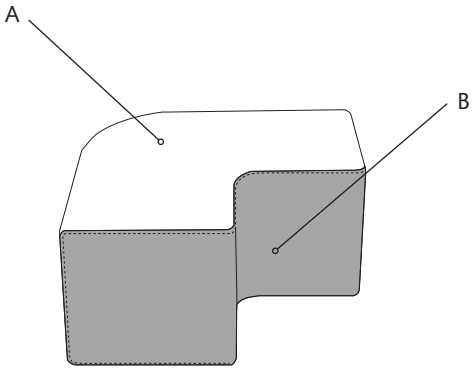


2 Fabric option - 90˚ Round Corner

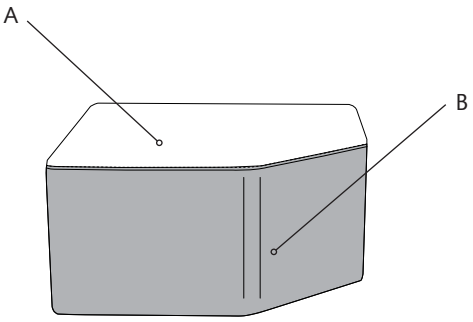


2 Fabric option - Square Corner

SQUARE TABOURET

TWO SEAT BENCH

THREE SEAT BENCH

90˚ SQUARE CORNER

90˚ ROUND CORNER

30˚ARC



45˚ ARC

60˚ ARC

90˚ ARC

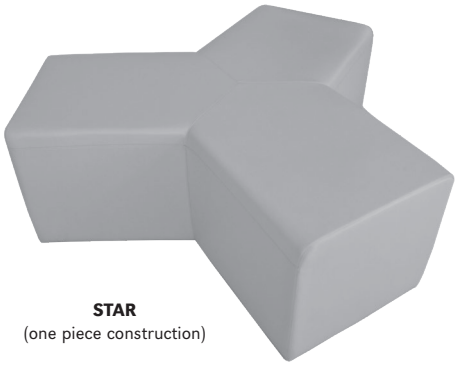

**STAR**
(one piece construction)

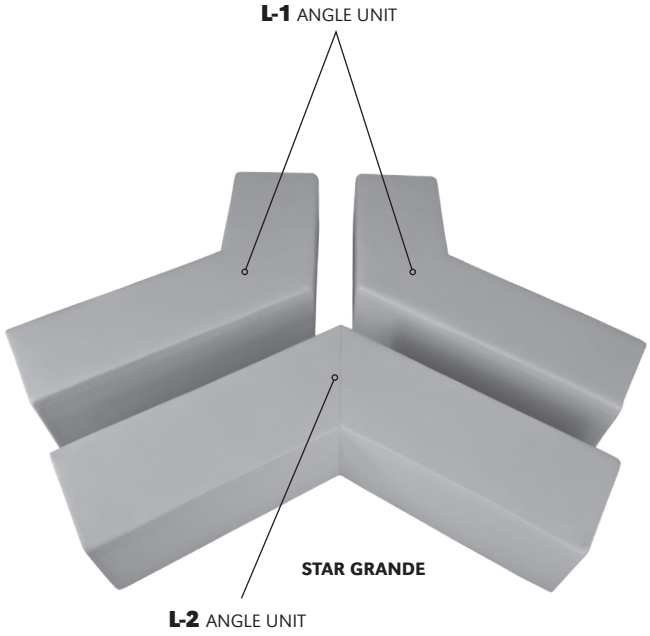

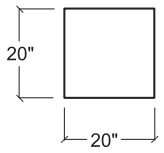


SQUARE TABOURET

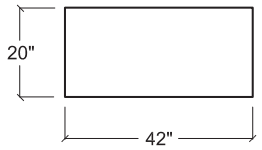


TWO SEAT BENCH

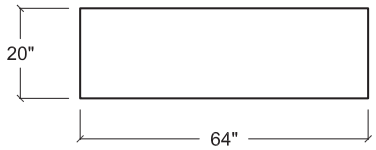


THREE SEAT BENCH

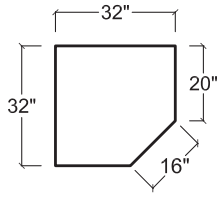


90˚ SQUARE CORNER

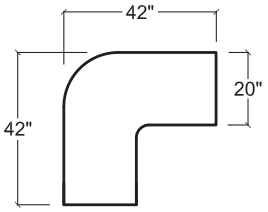


90˚ ROUND CORNER

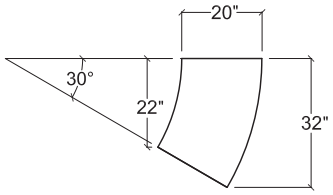


30˚ ARC

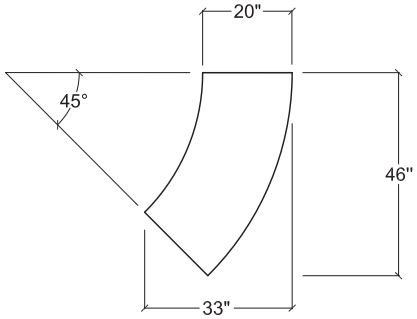


45˚ ARC

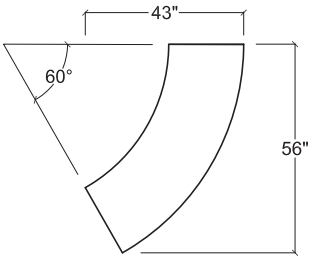


60˚ ARC

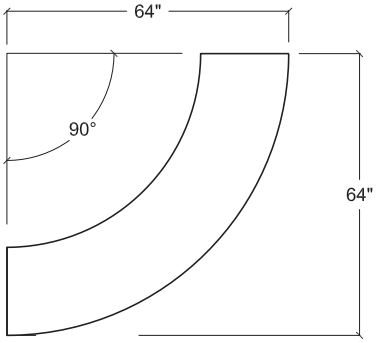


90˚ ARC

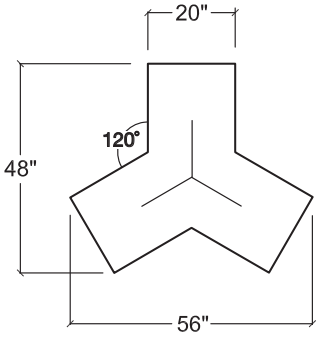


**STAR**

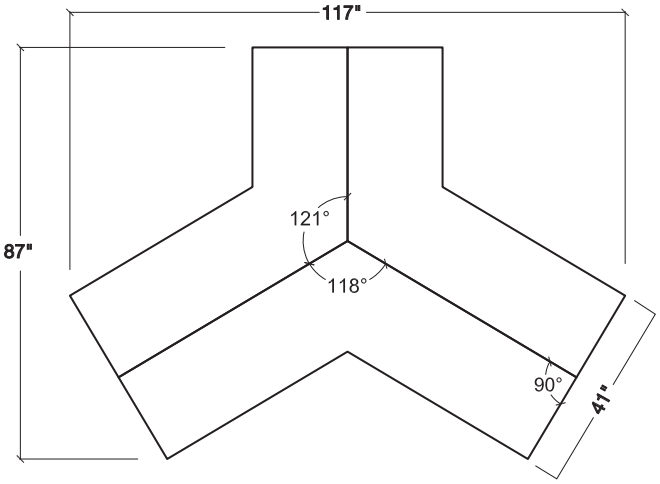


**STAR GRANDE**

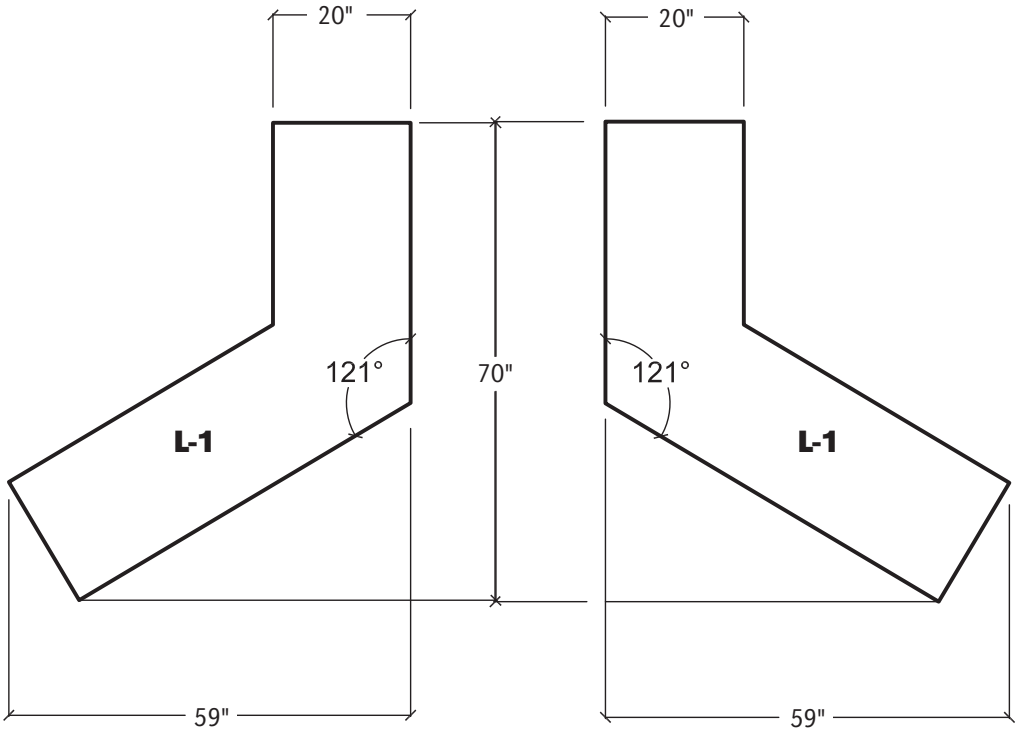


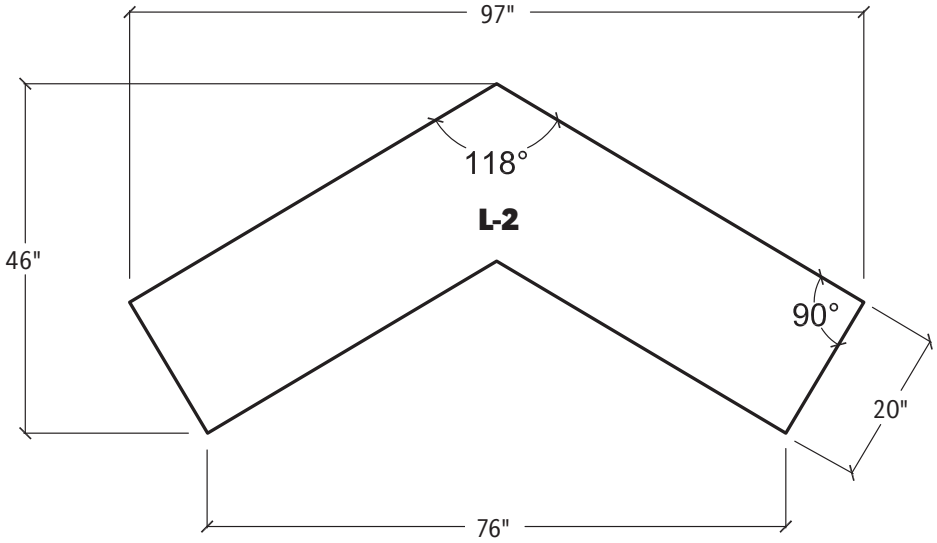


**STAR GRANDE**

Note 1: The three illustrated components above are required for the Star Grande configuration.

Note 2: For Star Grande overall dimensions please see previous page.

## "C" CONFIGURATION

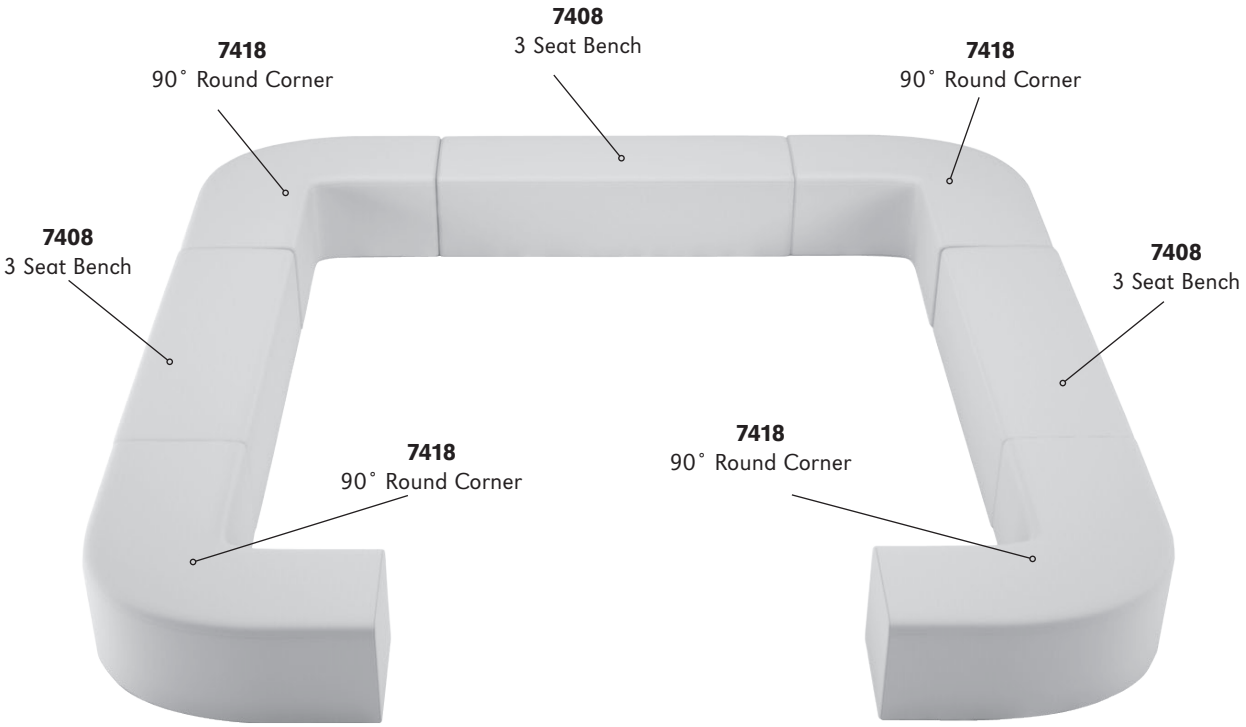


**"C" Configuration Includes:**

| Qty. | Description | Pricing (COM): |
|---|---|---|
| 4 - 7418 | 90˚ Round Corner | $7098 |
| 3 - 7408 | 3 Seat Bench | $5131 |
| 6 - 7433 | Flat Ganging Sets | $347 |
| | | $12576 list |

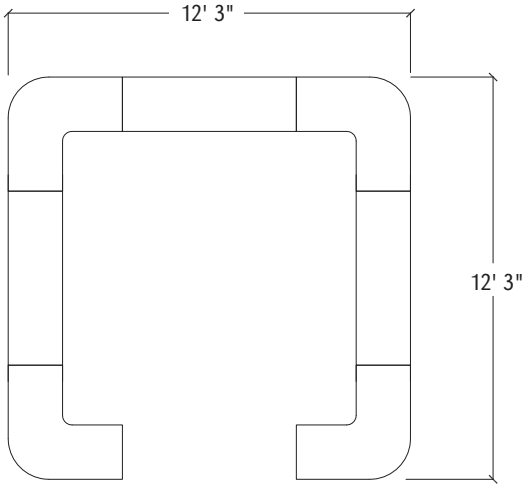

## "PENTA" CONFIGURATION

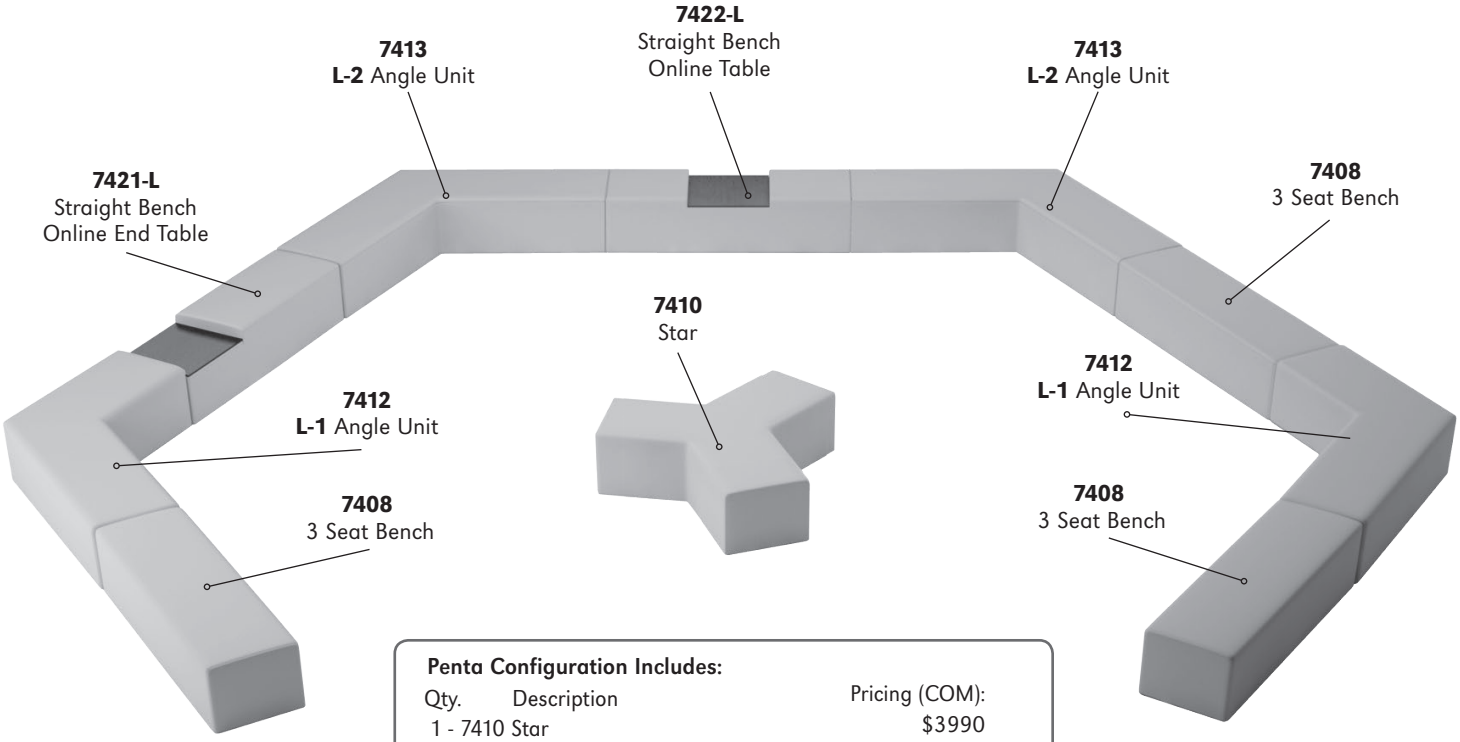


**Penta Configuration Includes:**

| Qty. | Description | Pricing (COM): |
|---|---|---|
| 1 - | 7410 Star | $3990 |
| 3 - | 7408 3 Seat Bench | $5131 |
| 1 - | 7421-L 3 Straight Bench Online Table | $3188 |
| 1 - | 7422-L 3 Straight Bench Online Table | $2091 |
| 2 - | 7412 L-1 Corner | $6377 |
| 2 - | 7413 L-2 Corner | $7608 |
| 8 - | 7433 Flat Ganging Sets | $462 |
| | | $28847 list |

Note: Star can be replaced with the larger Star Grande or any other choices from our selection of furniture.

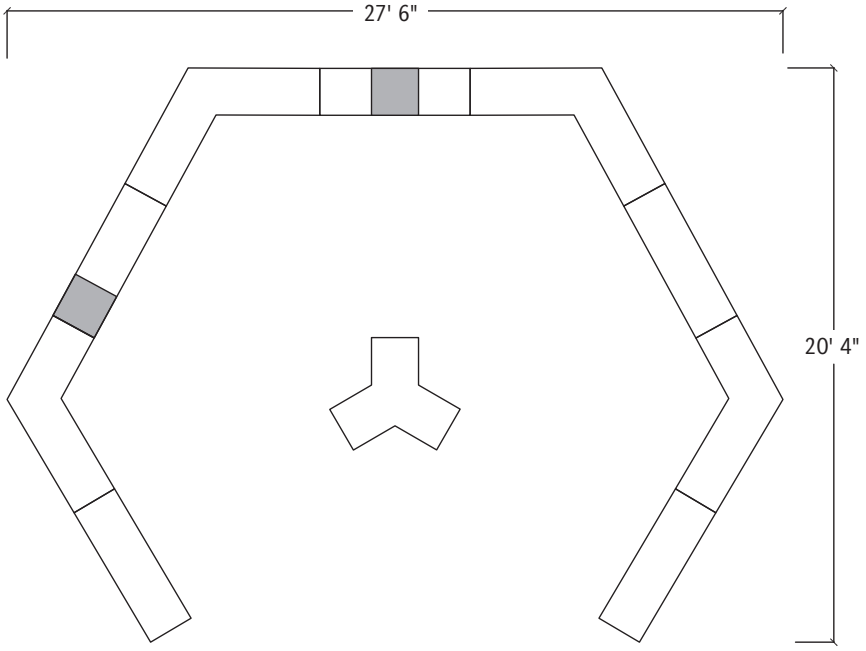

## STAR BENCHING CONFIGURATION

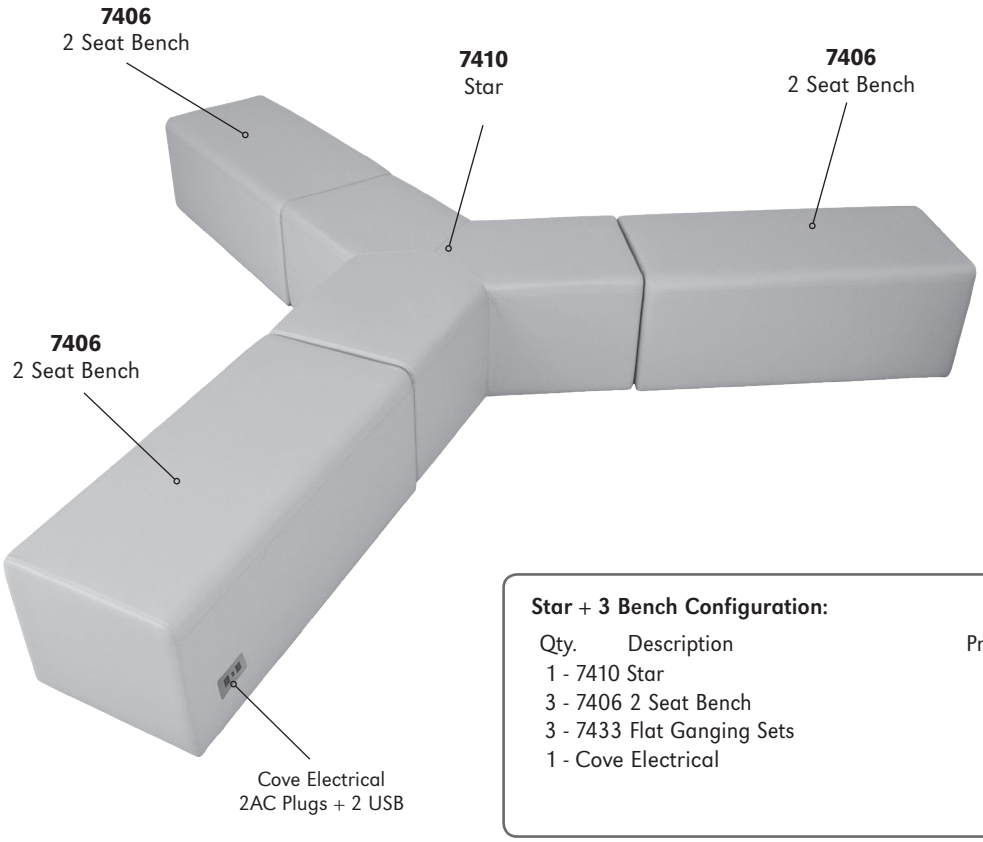


**Star + 3 Bench Configuration:**

| Qty. | Description | Pricing (COM): |
|---|---|---|
| 1 - | 7410 Star | $3990 |
| 3 - | 7406 2 Seat Bench | $4320 |
| 3 - | 7433 Flat Ganging Sets | $173 |
| 1 - | Cove Electrical | $509 |
| | | $8992 list |

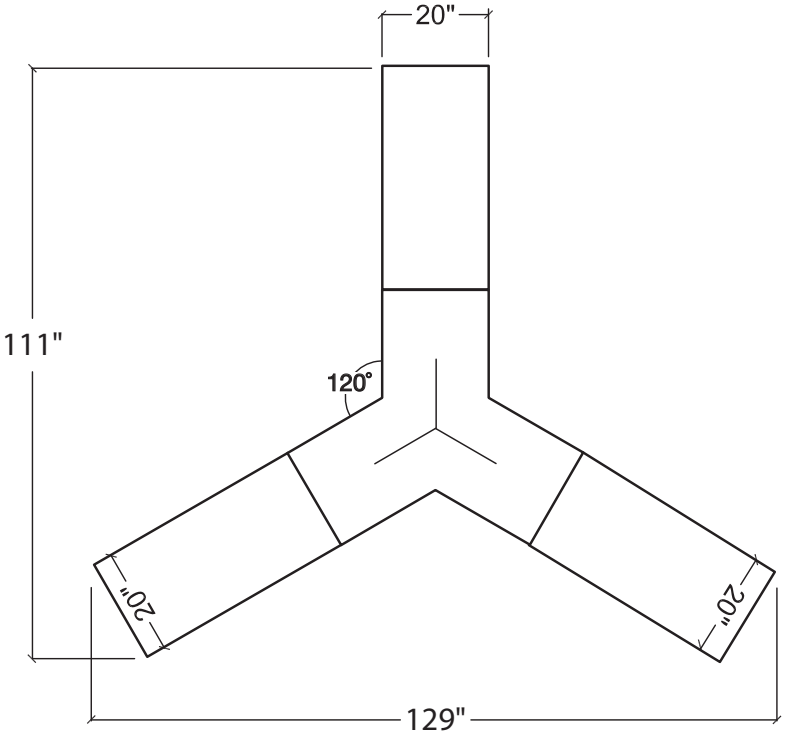


**STAR** WITH 3 BENCH CONFIGURATION

**Star** (one piece construction)

| Qty. | Description | Pricing (COM): |
|---|---|---|
| 1 - | 7410 Star | $3661 |

## SERPENTINE WITH ONLINE OPEN END TABLE

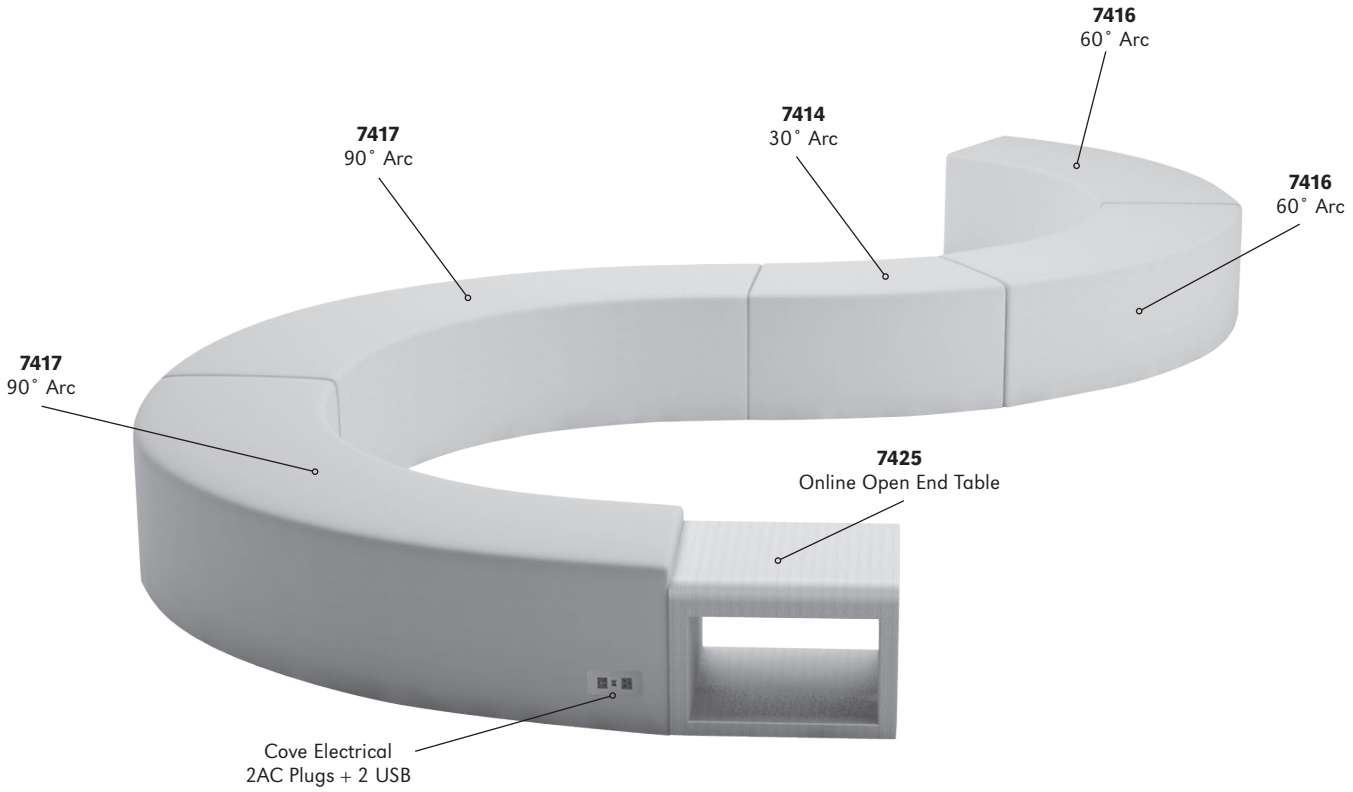


**Serpentine Configuration with Online Open End Table:**

| Qty. | Description | Pricing (COM): |
|---|---|---|
| 2 - 7417 | 90˚ Arc | $3747 |
| 2 - 7416 | 60˚ Arc | $3209 |
| 1 - 7414 | 30˚ Arc | $1024 |
| 1 - 7425 | Online Open End Table | $1820 |
| 1 - Cove Electrical | | $509 |
| 5 - Flat Ganging Sets | | $289 |
| | | $10598 list |

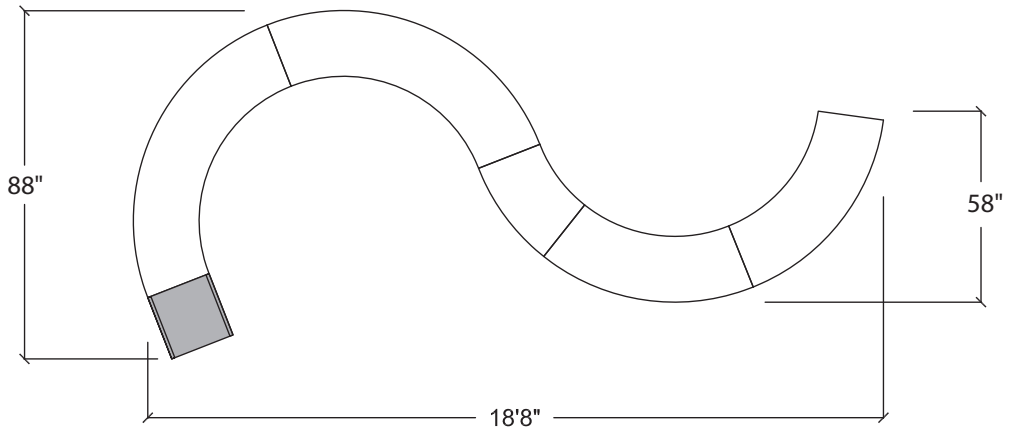

## SERPENTINE CONFIGURATION

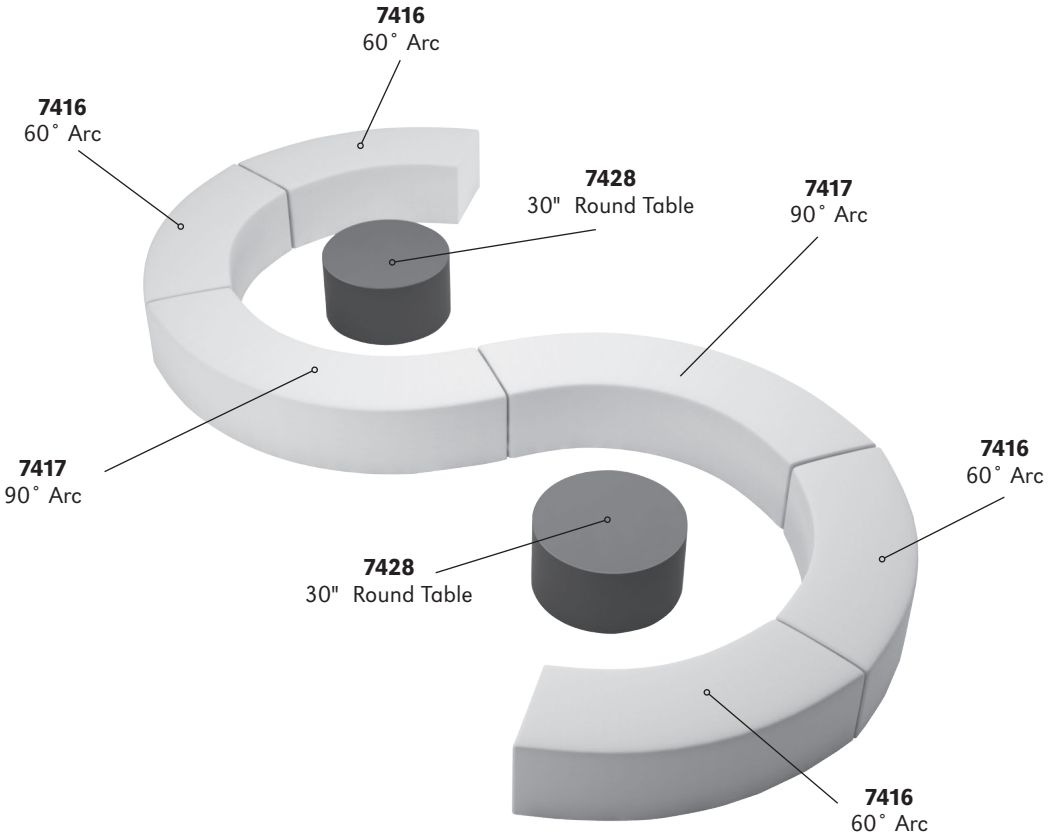


**"S" Configuration with Round Tables Includes:**

| Qty. | Description | Pricing (COM): |
|---|---|---|
| 2 - 7417 | 90˚ Arc | $3747 |
| 2 - 7428 | 30" Round Table | $2633 |
| 4 - 7416 | 60˚ Arc | $6418 |
| 5 - 7433 | Flat Ganging Sets | $289 |
| | | $13087 list |

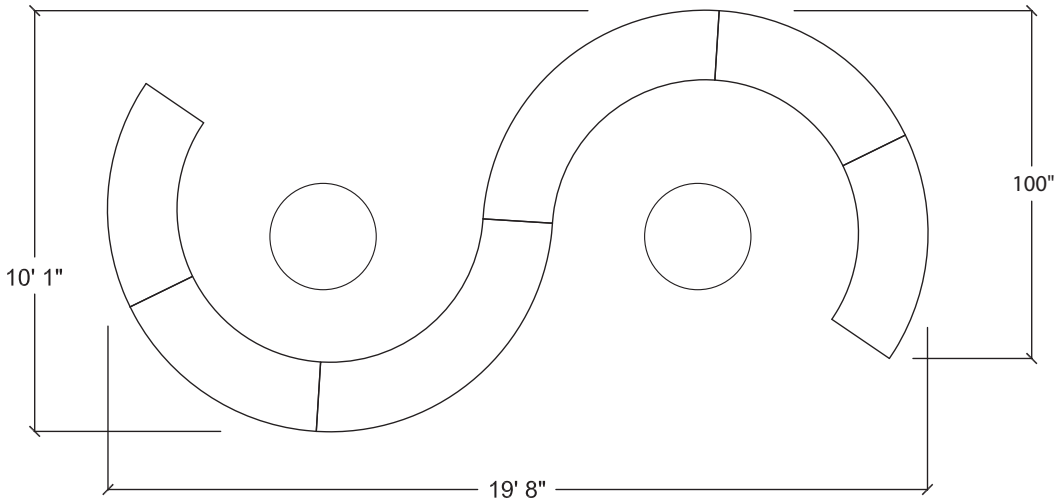

## "U" CONFIGURATION WITH ONLINE TABLES

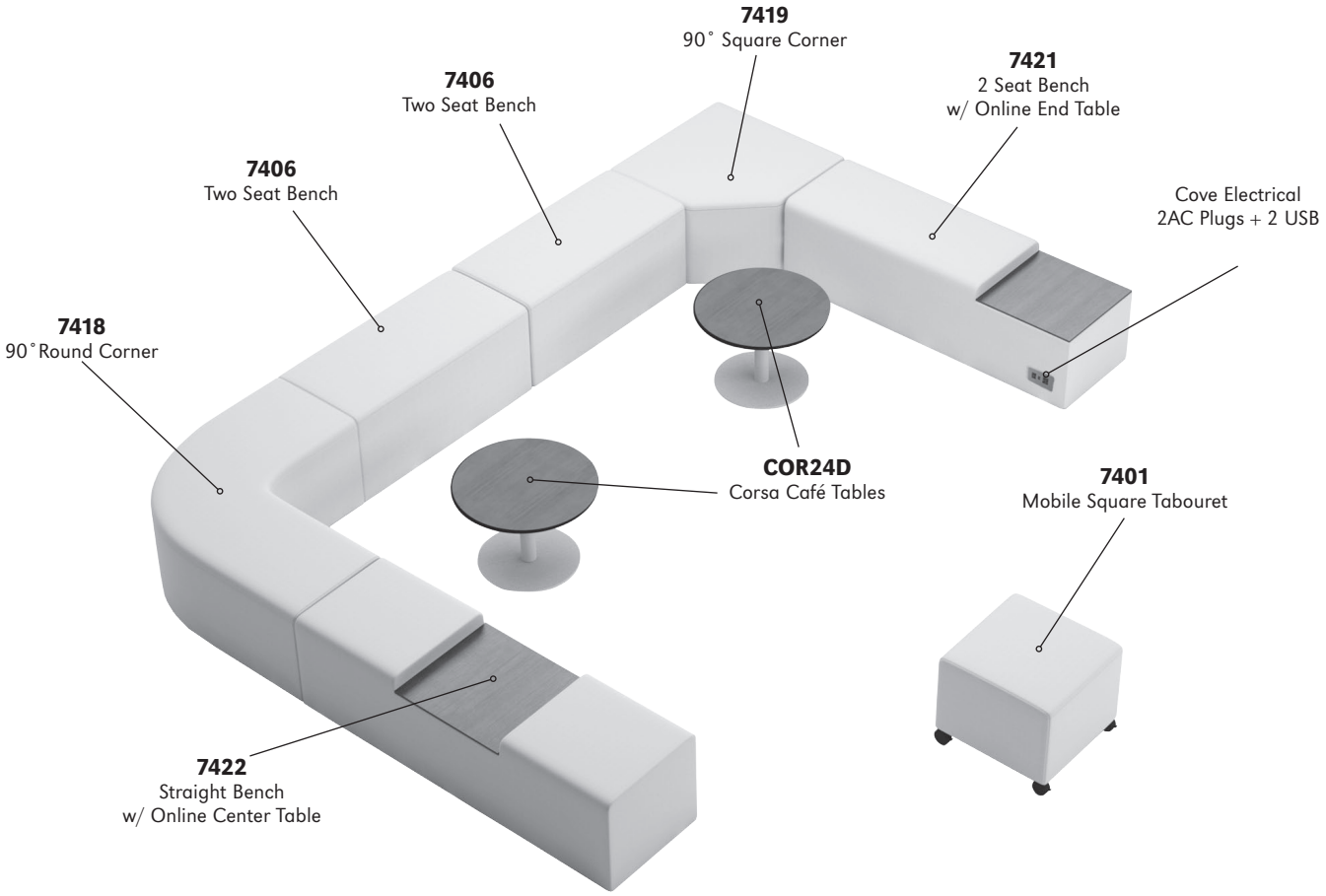


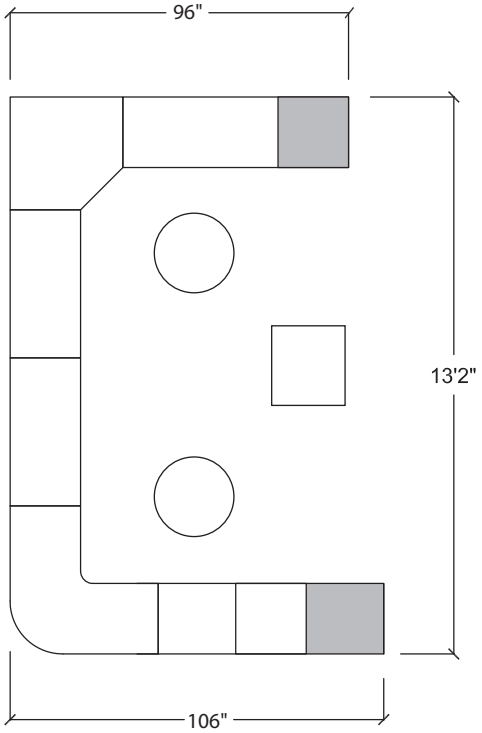


**"U"- Configuration with online tables Include:**

| Qty. | Description | Pricing (COM): |
|---|---|---|
| 2 - | 7406 Two Seat Bench | $2880 |
| 1 - | 7418 90˚ Round Corner | $1775 |
| 1 - | 7419 90˚ Square Corner | $1705 |
| 1 - | 7421 Straight Bench w/ Online Table | $2194 |
| 1 - | 7422 Straight Bench w/ Online Center Table | $2194 |
| 1 - | 7401 Square Tabouret on Casters | $1065 |
| 2 - | COR24D Corsa Café Tables - Wood Veneer | $2215 |
| 1 - | Cove Electrical 2 AC Plugs + 2 USB | $509 |
| 5 - | 7433 Flat Ganging Sets | $289 |
| | | $14826 list |

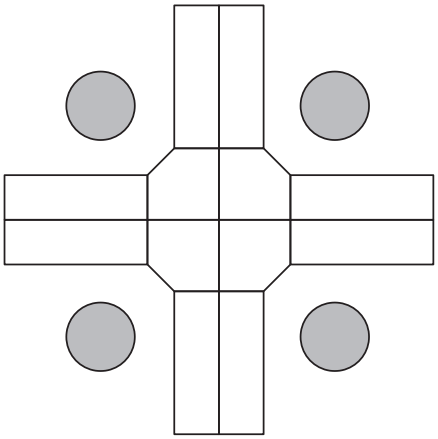

CROSS CORNER CLUSTER

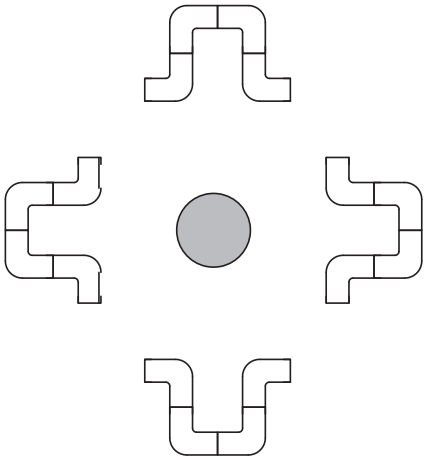

CLUSTER UNITS

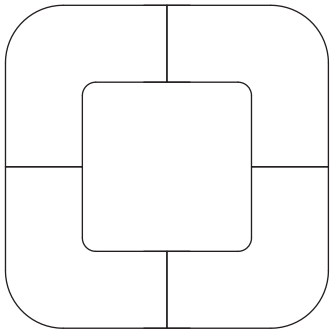

SQUARE CLUSTER

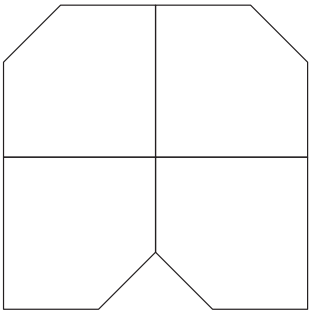

HORSE SHOE CLUSTER

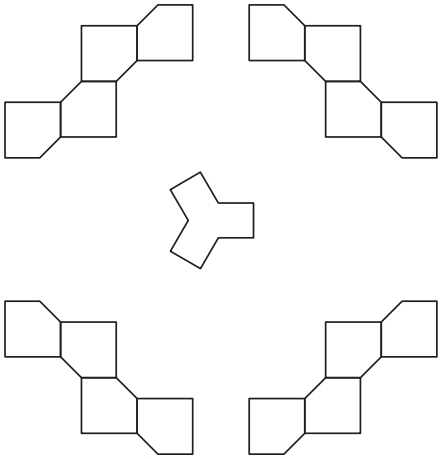

HONEYCOMB CLUSTER

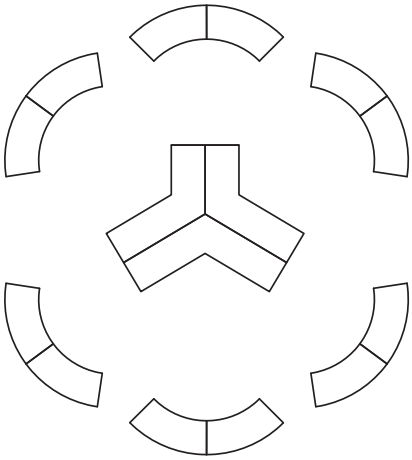

COLLABORATIVE CLUSTER

# Connos Collaborative Seating Arrangement

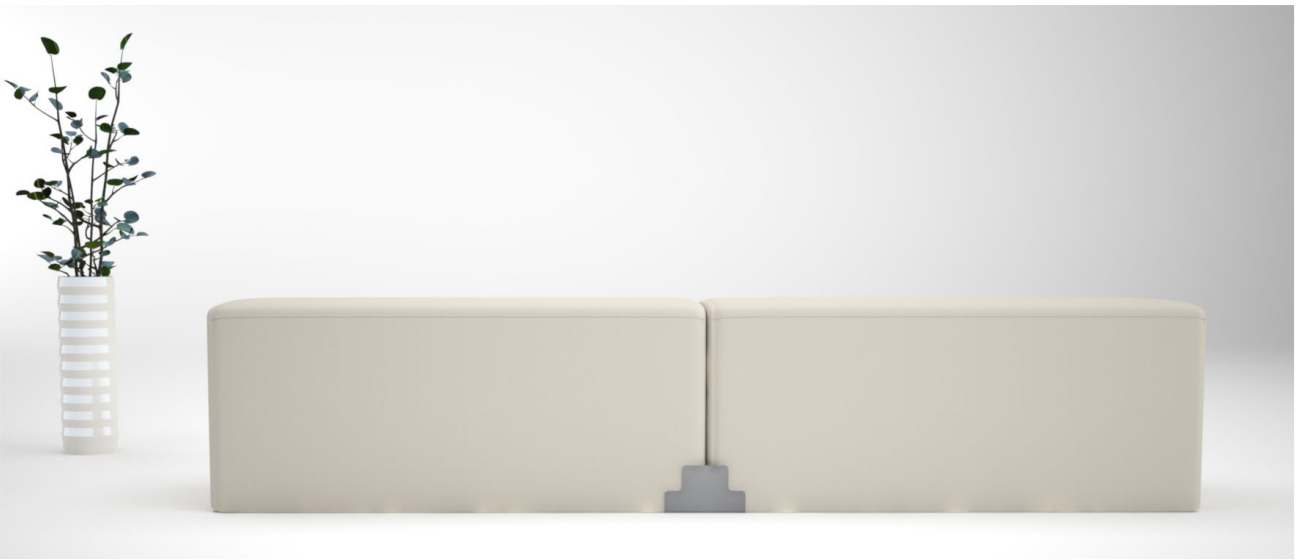

2 seat benches shown with optional decorative ganging

mobile tabouret with straight tablet arm and casters

mobile tabouret with diagonal tablet arm and casters

tabouret

# Connos Benches and Online Tables

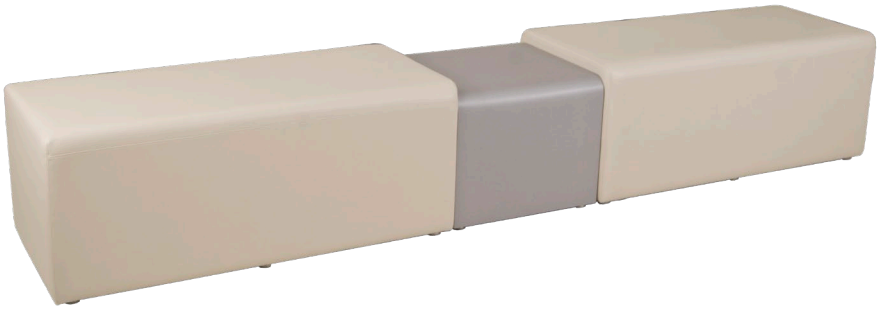

2 TWO SEAT BENCHES WITH SOLID ONLINE TABLE

2 TWO SEAT BENCHES WITH OPEN END ONLINE TABLE

2 TWO SEAT BENCHES WITH OPEN END ONLINE TABLE AND SOLID END TABLE

NOTE: Flat ganging brackets may be used to attach units to tables.